LARGE RANGE DIGITAL RADIUS GAUGE

DATA OUTPUT

VIDEO

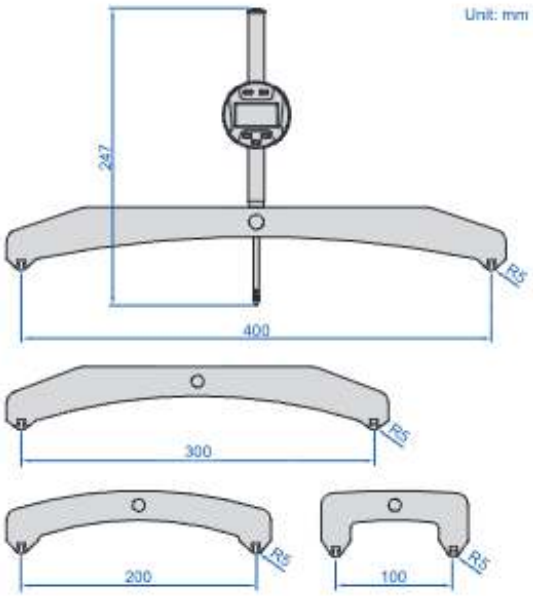



2197

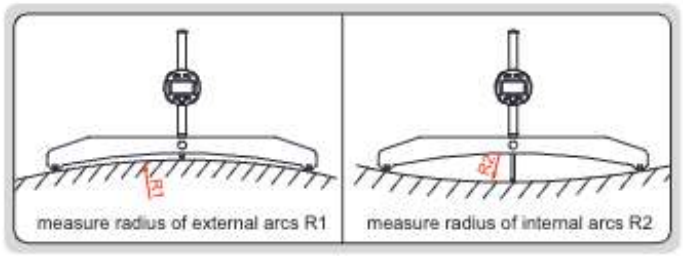

- Measure radius of internal or external arcs
- Resolution: 0.01mm/0.001"
- Buttons: on/off, hold, mm/inch, s (select jaws), zero
- Display can be rotated by 320°
- Supplied with 4 jaws for different sizes of arc
- Battery CR2032, automatic power off (time is adjustable)
- Data output
- Optional accessory:
  wireless transmitter code **7315-50M** (receiver is needed) page 8

8

Code	Range of external radius (R1)	Range of internal radius (R2)	Accuracy (mm)
2197	100-15000mm/4-590"	100-15000mm/4-590"	±0.005R*

*R is the radius to be measured. For example, radius is 100mm, the accuracy is ±0.005×100=±0.5mm

DIGITAL ARC RADIUS CALIPERS

DATA OUTPUT

VIDEO

- Non waterproof
- Measure the radius of arc less than half round
- Resolution: 0.01mm/0.0005"
- Buttons: on/off, zero, mm/inch
- Automatic power off, move the digital unit to turn on power
- Battery CR2032
- Data output
- Made of stainless steel



1189-200B



With data interface (optional wireless transmitter code 7315-25, receiver is needed page 7)

Code	Range (R)	Accuracy	L	c	d
1189-150B	5-150mm/0.2-6"	±0.05mm	263mm	16mm	65mm
1189-200B	5-200mm/0.2-8"	±0.07mm	313mm	16mm	85mm

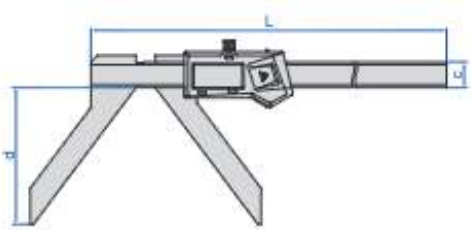

Built-in wireless (receiver code 7315-2/3/6/7/8/9 is needed)

Code	Range (R)	Accuracy	L	c	d
1189-150BWL	5-150mm/0.2-6"	±0.05mm	263mm	16mm	65mm
1189-200BWL	5-200mm/0.2-8"	±0.07mm	313mm	16mm	85mm