VERNIER CALIPERS (SEPARATE TYPE)

POPULAR MODEL

- With fine adjustment
- Made of stainless steel
- Satin chrome plated reading surface



1214-500

Graduation 0.02mm/0.001" (mm)

Code	Range	Accuracy	a	c	d	e	L
1214-300	0-300mm/0-12"	±0.05mm	10	20	75	10	410
1214-450	0-450mm/0-18"	±0.05mm	18	24	100	20	620
1214-500	0-500mm/0-20"	±0.05mm	18	24	100	20	670
1214-600	0-600mm/0-24"	±0.05mm	18	24	100	20	770
1214-1000	0-1000mm/0-40"	±0.08mm	24	32	140	20	1216
1214-1500	0-1500mm/0-60"	±0.12mm	24	42	200	20	1830
1214-2000	0-2000mm/0-80"	±0.14mm	24	42	200	20	2320

Graduation 0.05mm/1/128" (mm)

Code	Range	Accuracy	a	c	d	e	L
1214-6004	0-600mm/0-24"	±0.08mm	18	24	100	20	770
1214-1004	0-1000mm/0-40"	±0.12mm	24	32	140	20	1216

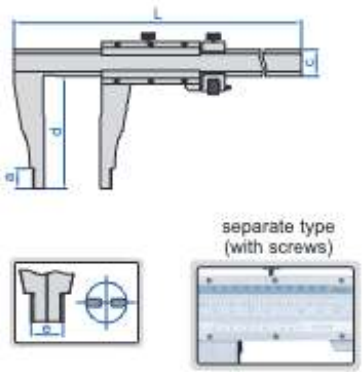

LONG JAW VERNIER CALIPERS (SEPARATE TYPE)

- With fine adjustment
- Made of stainless steel
- Satin chrome plated reading surface



1215-1032

Graduation 0.02mm/0.001" (mm)

Code	Range	Accuracy	a	c	d	e	L
1215-392	0-300mm/0-12"	±0.05mm	10	17	90	10	410
1215-322	0-300mm/0-12"	±0.05mm	18	24	150	20	470
1215-522	0-500mm/0-20"	±0.06mm	18	24	150	20	670
1215-532	0-500mm/0-20"	±0.06mm	18	24	200	20	670
1215-622	0-600mm/0-24"	±0.06mm	18	24	150	20	770
1215-642	0-600mm/0-24"	±0.08mm	24	32	250	20	870
1215-822	0-800mm/0-32"	±0.07mm	24	32	150	20	1020
1215-832	0-800mm/0-32"	±0.07mm	24	32	200	20	1020
1215-1032	0-1000mm/0-40"	±0.08mm	24	32	200	20	1220
1215-1052	0-1000mm/0-40"	±0.11mm	24	42	300	20	1330
1215-3052	0-3000mm/0-120"	±0.26mm	24	50	300	20	3360

Graduation 0.05mm/1/128" (mm)

Code	Range	Accuracy	a	c	d	e	L
1215-524	0-500mm/0-20"	±0.08mm	18	24	150	20	670
1215-1034	0-1000mm/0-40"	±0.12mm	24	32	200	20	1330

