VERNIER HOOK DEPTH GAUGE

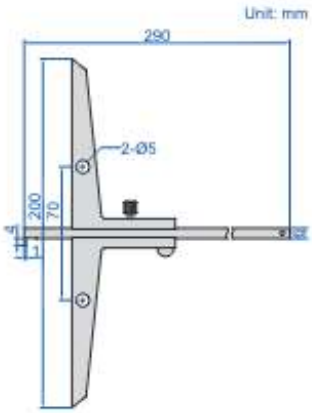



1243-2001

- Graduation 0.02mm
- Made of stainless steel
- Satin chrome plating finish on reading surface

Code	Range	Accuracy
1243-2001	0-200mm	±0.04mm

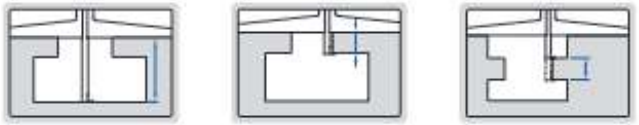

EXTENSION BASES



6141-260

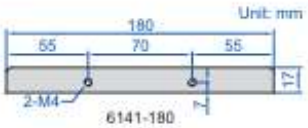

6141-180

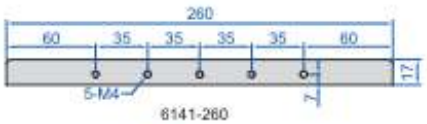

6141-260

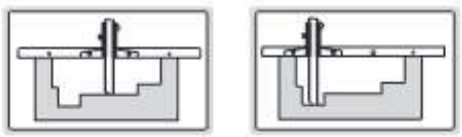

- Supplied with two screws
- Made of stainless steel
- Suitable for depth gauges series **1147**, **1148**, **1247**, **1248** and **1249**

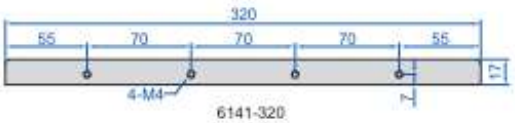

6141-320

Code	Length
6141-180	180mm
6141-260	260mm
6141-320	320mm
6141-600	600mm

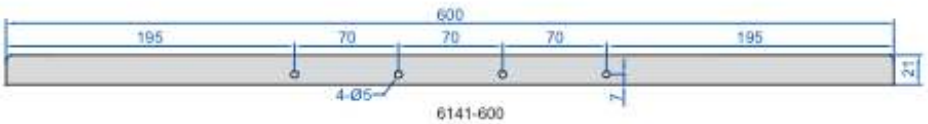

6141-600

MINI VERNIER DEPTH GAUGE



1244-30

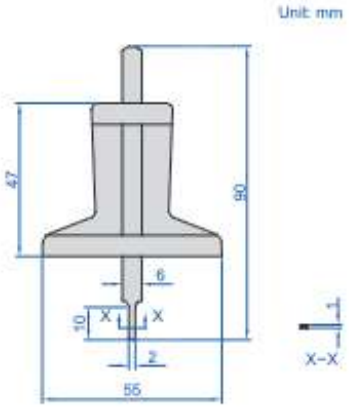

- Graduation: 0.1mm
- Made of stainless steel

Code	Range	Accuracy
1244-30	0-30mm	±0.10mm