INSIDE GROOVE VERNIER CALIPER

- Measure diameter of grooves inside bores
- Made of stainless steel
- Satin chrome plated reading surface



1262-150A

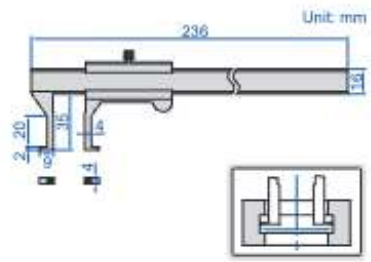

Code	Range	Graduation	Accuracy
1262-150A	18-150mm	0.02mm	±0.04mm

DIGITAL INSIDE GROOVE CALIPERS

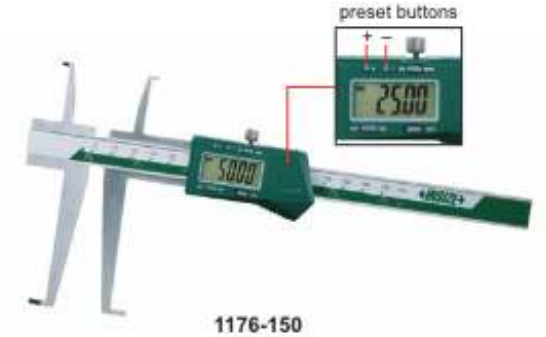

1176-150



1176-150P

depth stop **6143** (**optional**)



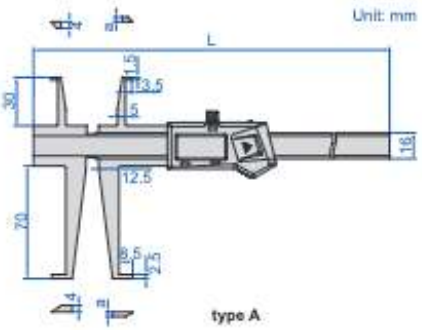

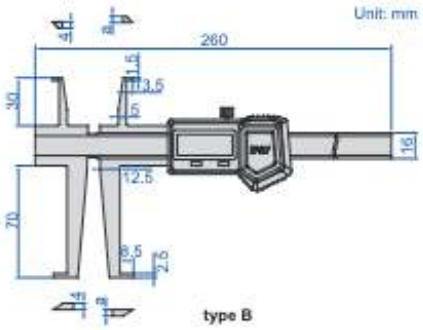

- Measure diameter of grooves inside bores
- Resolution: 0.01mm/0.0005"
- Buttons type A: on/off, set, mm/inch, preset (+, -)
  type B: on/off, zero, mm/inch, ABS/REL, hold
- Battery CR2032
- Made of stainless steel
- Optional accessory: depth stop (code **6143**)

sizes to be measured (use upper jaws)

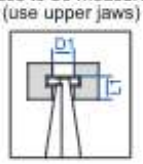

(mm)

D1	L1
Ø9	<8
Ø10	<15
Ø11~200	<30

sizes to be measured (use lower jaws)

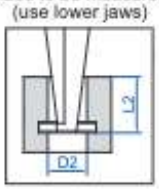

(mm)

D2	L2
Ø17	<16
Ø18	<28
Ø19	<40
Ø20	<50
Ø21	<58
Ø22~200	<70

Non waterproof, with data interface
(optional wireless transmitter code 7315-25, receiver is needed page 7)

Code	Range of upper jaw	Range of lower jaw	Type	Accuracy	L	a
1176-150	9-150mm/0.35-6"	17-150mm/0.70-6"	A	±0.04mm	260mm	3mm
1176-200	9-200mm/0.35-8"	17-200mm/0.70-8"	A	±0.05mm	320mm	3.5mm

Non waterproof, built-in wireless (receiver code 7315-2/3/6/7/8/9 is needed)

Code	Range of upper jaw	Range of lower jaw	Type	Accuracy	L	a
1176-150WL	9-150mm/0.35-6"	17-150mm/0.70-6"	A	±0.04mm	260mm	3mm
1176-200WL	9-200mm/0.35-8"	17-200mm/0.70-8"	A	±0.05mm	320mm	3.5mm

IP67 dust/waterproof, without data interface, no automatic power off, set zero after power on each time

Code	Range of upper jaw	Range of lower jaw	Type	Accuracy	a
1176-150P	9-150mm/0.35-6"	17-150mm/0.70-6"	B	±0.04mm	4mm