INSIDE GROOVE CALIPERS



1199-150

depth stop **6143** (**optional**)



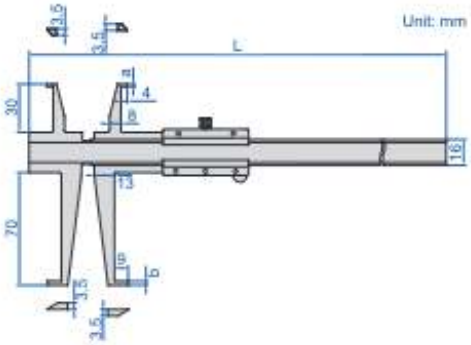

- Measure diameter of grooves inside bores
- Graduation: 0.02mm
- Made of stainless steel
- Optional accessory: depth stop (code **6143**)

sizes to be measured (use upper jaws)

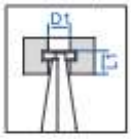

(mm)

D1	L1
Ø9	<8
Ø10	<12
Ø11	<15
Ø12	<20
Ø13~300	<30

sizes to be measured (use lower jaws)

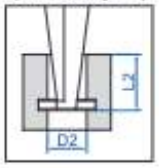

(mm)

D2	L2
Ø18	<30
Ø19	<40
Ø20	<45
Ø21	<55
Ø22	<60
Ø23~300	<70

Code	Range of upper jaw	Range of lower jaw	Accuracy	L	a	b
1199-150	9-150mm	18-150mm	±0.04mm	248mm	1.6mm	2.5mm
1199-200	9-200mm	18-200mm	±0.05mm	298mm	1.8mm	2.8mm
1199-300	9-300mm	18-300mm	±0.06mm	398mm	2.0mm	3.0mm

INSIDE GROOVE DIAL CALIPERS

SHOCK PROOF

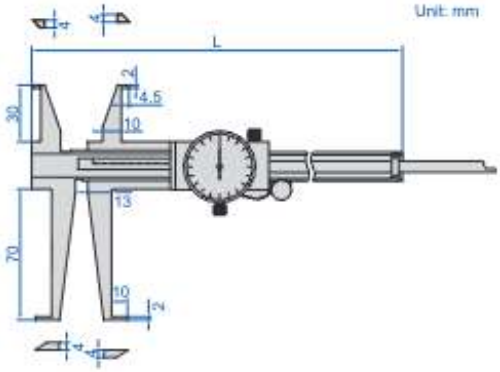



1376-150

- Measure diameter of grooves inside bores
- Shockproof dial indicator
- Dial indicator graduation: 0.02mm
- Made of stainless steel
- Optional accessory: depth stop (code **6143**)

sizes to be measured (use upper jaws)

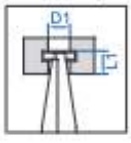

(mm)

D1	L1
Ø11	<8
Ø12	<10
Ø13	<15
Ø14	<20
Ø15~300	<30

sizes to be measured (use lower jaws)

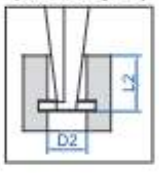

(mm)

D2	L2
Ø18	<20
Ø19	<28
Ø20	<35
Ø21	<40
Ø22	<50
Ø23~300	<70

Code	Range of upper jaw	Range of lower jaw	Accuracy	L
1376-150	11-150mm	18-150mm	±0.03mm	240mm
1376-200	11-200mm	18-200mm	±0.03mm	290mm
1376-300	11-300mm	18-300mm	±0.04mm	390mm