DIGITAL CALIPERS FOR BORING TOOLS

DATA OUTPUT

- Non waterproof
- Measure height of boring tools
- Resolution: 0.01mm/0.0005"
- Buttons: on/off, set, mm/inch, preset (+, -)
- Automatic power off, move the digital unit to turn on power
- Battery CR2032
- Data output
- Made of stainless steel





1512-150

application

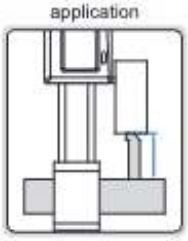

With data interface (optional wireless transmitter code 7315-25, receiver is needed page 7)

Code	Range	Accuracy	Remark
1512-150	0-150mm/0-6"	±0.03mm	for shank with diameter Ø10-80mm

Built-in wireless (receiver code 7315-2/3/6/7/8/9 is needed)

Code	Range	Accuracy	Remark
1512-150WL	0-150mm/0-6"	±0.03mm	for shank with diameter Ø10-80mm

Unit: mm

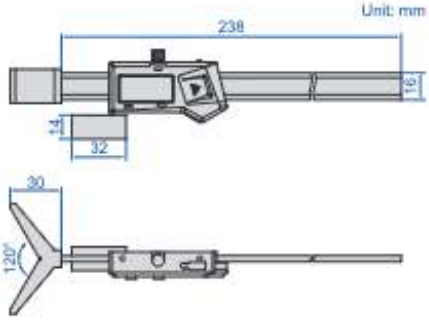

DIGITAL CALIPERS FOR BORES WITH BARRIER INSIDE

DATA OUTPUT

RELATIVE PRODUCT: BORE GAUGE FOR BARRIER INSIDE BORE (CODE 2348)



1513-200

Unit: mm

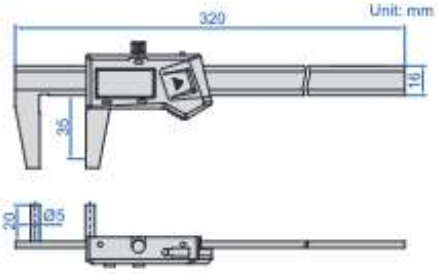

- Non waterproof
- Measure diameter of bores with barrier inside
- Resolution: 0.01mm/0.0005"
- Buttons: on/off, set, mm/inch, preset (+, -)
- Automatic power off, move the digital unit to turn on power
- Battery CR2032
- Data output
- Made of stainless steel

application



With data interface (optional wireless transmitter code 7315-25, receiver is needed page 7)

Code	Range (ØD)*	Diameter of barrier (Ød)	Accuracy
1513-200	10-200mm/0.4-8"	<D-10mm (less than 70mm)	±0.03mm

Built-in wireless (receiver code 7315-2/3/6/7/8/9 is needed)

Code	Range (ØD)*	Diameter of barrier (Ød)	Accuracy
1513-200WL	10-200mm/0.4-8"	<D-10mm (less than 70mm)	±0.03mm

*For example:
When measuring size (ØD) is 40mm, D-10=30mm, so the diameter of barrier (Ød) should be less than 30mm.
When measuring size (ØD) is 100mm, D-10=90mm, however it should be less than 70mm,
so the diameter of barrier (Ød) should be less than 70mm.