DIGITAL CALIPERS WITH DISK FACES

DATA OUTPUT

- Non waterproof
- Measure thickness of soft sheets
- Resolution: 0.01mm/0.0005"
- Buttons: on/off, zero, mm/inch
- Automatic power off, move the digital unit to turn on power
- Battery CR2032
- Made of stainless steel



1533-150

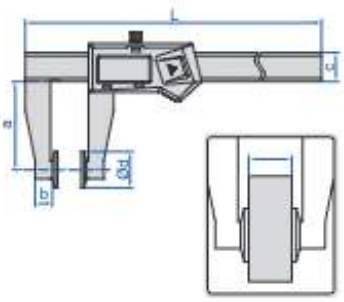

With data interface (mm)

Code	Range	Accuracy	L	a	b	c	Ød	Wireless transmitter (optional)
1533-150	0-150mm/0-6"	±0.04mm	245	50	11	16	20	**7315-25** (receiver is needed) page 7
1533-200	0-200mm/0-8"	±0.05mm	310	80	11	16	30	
1533-500	0-500mm/0-20"	±0.07mm	680	150	12.5	24	50	**7315-22** (receiver is needed) page 7

Built-in wireless (receiver code 7315-2/3/6/7/8/9 is needed) (mm)

Code	Range	Accuracy	L	a	b	c	Ød
1533-150WL	0-150mm/0-6"	±0.04mm	245	50	11	16	20
1533-200WL	0-200mm/0-8"	±0.05mm	310	80	11	16	30
1533-500WL	0-500mm/0-20"	±0.07mm	680	150	12.5	24	50

DIGITAL WALL THICKNESS CALIPERS

DATA OUTPUT



1536-300

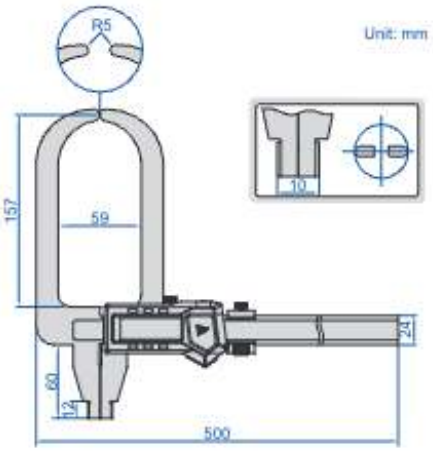

- Non waterproof
- Measure wall thickness of helmets, domes and curved pots
- Resolution: 0.01mm/0.0005"
- Buttons: on/off, zero, mm/inch, ABS, data preset
- Automatic power off, move the digital unit to turn on power
- Battery CR2032
- Made of stainless steel

With data interface (optional wireless transmitter code 7315-22, receiver is needed page 7)

Code	Range	Accuracy
1536-300	0-300mm/0-12"	±0.05mm

Built-in wireless (receiver code 7315-2/3/6/7/8/9 is needed)

Code	Range	Accuracy
1536-300WL	0-300mm/0-12"	±0.05mm

