DIGITAL DEPTH GAUGES

DATA OUTPUT



2141-202A



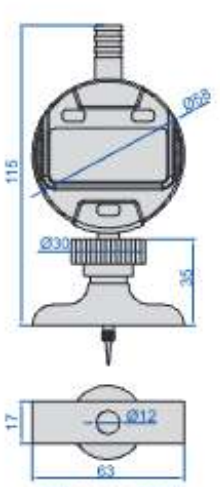

2141-201A/2141-301

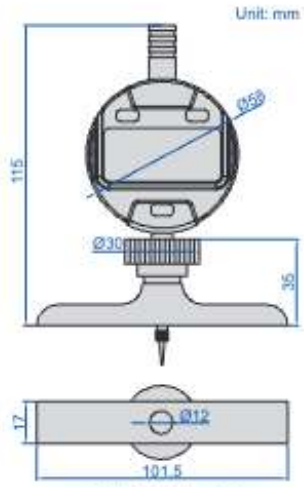

2141-202A/2141-302

- Button function: on/off, zero, mm/inch, ABS, data preset, change measuring direction
- CR2032 battery, automatic power off (time is adjustable)
- Data output
- Stainless steel base
- Extension rods: 12.5mm (1pc), 25mm (1pc), 50mm (1pc), 75mm (1pc), 100mm (2pcs)
- Supplied with pointed tip and ball tip
- Optional accessory: wireless transmitter code **7315-50M** (receiver is needed) page 8, granite extension holder (code **2141-10**)



pointed tip

ball tip

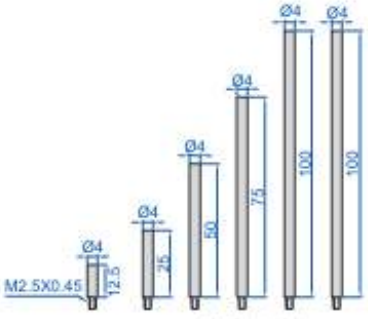

extension rods



2141-10 (optional), can be customized according to workpieces

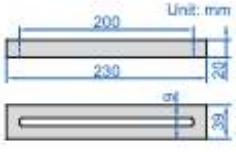

application

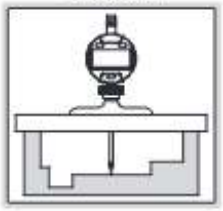

Code	Range	Digital indicator stroke	Digital indicator resolution	Accuracy	Base
2141-201A	0-300mm/0-12"	12.7mm/0.5"	0.01mm/0.0005"	±20μm	63×17mm
2141-202A	0-300mm/0-12"	12.7mm/0.5"	0.01mm/0.0005"	±20μm	101.5×17mm
2141-301	0-300mm/0-12"	12.7mm/0.5"	0.001mm/0.00005"	±5μm	63×17mm
2141-302	0-300mm/0-12"	12.7mm/0.5"	0.001mm/0.00005"	±5μm	101.5×17mm