DATA OUTPUT

DIGITAL DEPTH GAUGE (60° KNIFE EDGE BASE)

- Button function: on/off, zero, inch/mm, ABS, data preset, change measuring direction
- CR2032 battery, automatic power off (time is adjustable)
- Data output
- Stainless steel base with 60° knife edge
- Optional accessory: wireless transmitter code **7315-50M** (receiver is needed) page 8



front view



side view

2143-101

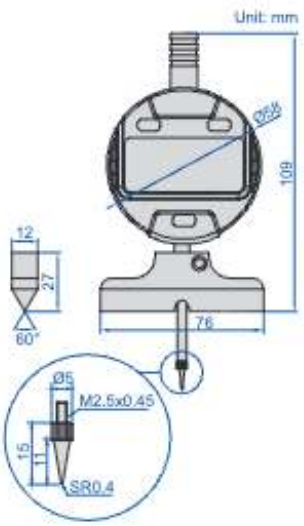

Code	Range	Digital indicator stroke	Digital indicator resolution	Accuracy
2143-101	0-12.7mm/0-0.5"	12.7mm/0.5"	0.01mm/0.0005"	±20μm

DATA OUTPUT

DIGITAL GROOVE GAUGES

VIDEO



2145-202



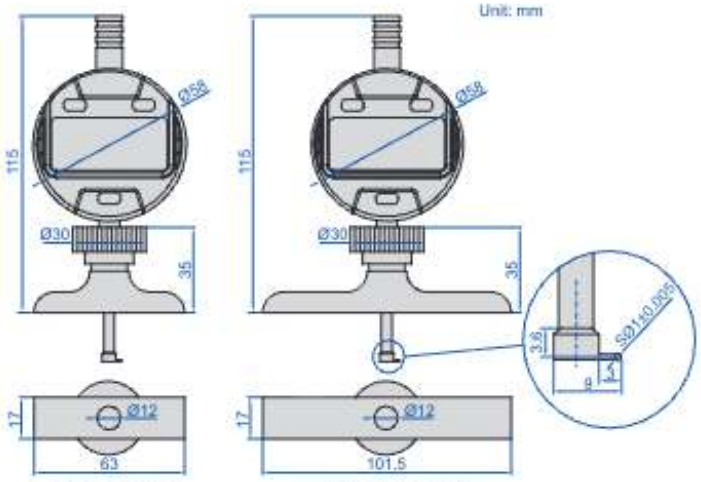

2145-201/2145-301

2145-202/2145-302

- Button function: on/off, zero, mm/inch, absolute/incremental measurement, data preset, change measuring direction
- CR2032 battery, automatic power off (time is adjustable)
- Data output
- Stainless steel base
- Supplied with extension rods: 12.5mm (1pc), 25mm (1pc), 50mm (1pc)
- Supplied with groove point
- Optional accessory: wireless transmitter code **7315-50M** (receiver is needed) page 8



extension rods

measure width (b) and depth (a) of groove

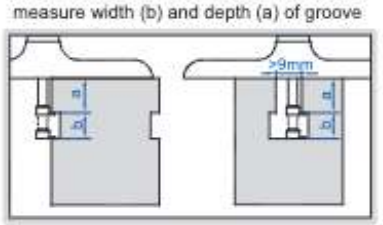

Code	Range (a)	Digital indicator stroke (b)	Digital indicator resolution	Accuracy	Base
2145-201	0-85mm/0-3.35"	12.7mm/0.5"	0.01mm/0.0005"	±20μm	63×17mm
2145-202	0-85mm/0-3.35"	12.7mm/0.5"	0.01mm/0.0005"	±20μm	101.5×17mm
2145-301	0-85mm/0-3.35"	12.7mm/0.5"	0.001mm/0.00005"	±5μm	63×17mm
2145-302	0-85mm/0-3.35"	12.7mm/0.5"	0.001mm/0.00005"	±5μm	101.5×17mm