THREAD/LEAD SCREW PITCH DIAMETER SNAP GAUGES

BALL TIP DIAMETER CAN BE CUSTOMIZED

application



VIDEO



digital indicator is optional

2165-40

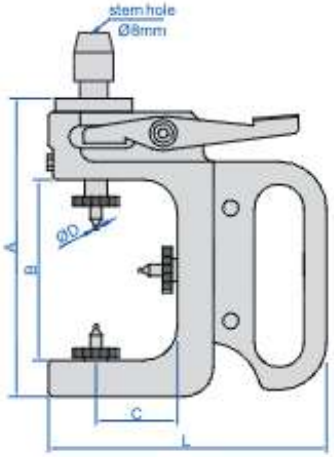

- Measure the pitch diameter of lead screw and external thread
- Ball tip diameter can be customized according to workpieces. Diameter of trapezoidal screw or external thread ball tips: ØD=0.5×pitch P/cos (thread angle α/2). Ball tips diameter ØD of ball screw is corresponding steel ball specification
- Probe retracting range: 3mm, measuring force: 20N
- Repeatability: 2μm
- Optional accessory: 0.001mm digital/dial indicators

Main body
(without ball probe, without digital indicator) (mm)

Code	Range	Accuracy	A	B	C	L
2165-20	3-20mm	±5μm	116	60	27	113
2165-40	20-40mm	±5μm	132	80	37	123
2165-60	40-60mm	±5μm	152	138	46	100
2165-80	60-80mm	±5μm	172	156	59	121
2165-100	80-100mm	±5μm	192	170	68	140



2165-A2D071

Ball probes
(for Metric trapezoidal thread 30° thread angle)

Code	ØD	Pitch
2165-A1D553	1.553mm	3mm
2165-A2D071	2.071mm	4mm
2165-A2D588	2.588mm	5mm
2165-A3D106	3.106mm	6mm
2165-A3D623	3.623mm	7mm
2165-A4D141	4.141mm	8mm
2165-A4D659	4.659mm	9mm
2165-A5D176	5.176mm	10mm
2165-A6D212	6.212mm	12mm
2165-A7D247	7.247mm	14mm
2165-A8D282	8.282mm	16mm
2165-A9D317	9.317mm	18mm
2165-A10D353	10.353mm	20mm

Ball probes
(for American trapezoidal thread 29° thread angle)

Code	ØD	TPI
2165-B0D0323	0.0323"	16
2165-B0D0369	0.0369"	14
2165-B0D043	0.0430"	12
2165-B0D0516	0.0516"	10
2165-B0D0646	0.0646"	8
2165-B0D0861	0.0861"	6
2165-B0D1033	0.1033"	5
2165-B0D1291	0.1291"	4
2165-B0D1722	0.1722"	3
2165-B0D2582	0.2582"	2

Ball probes
(for Metric external thread 60° thread angle)

Code	ØD	Pitch
2165-C0D557	0.577mm	1mm
2165-C0D722	0.722mm	1.25mm
2165-C0D866	0.866mm	1.5mm
2165-C1D155	1.155mm	2mm
2165-C1D732	1.732mm	3mm
2165-C2D021	2.021mm	3.5mm
2165-C2D309	2.309mm	4mm
2165-C2D887	2.887mm	5mm
2165-C3D464	3.464mm	6mm
2165-C4D619	4.619mm	8mm