MAGNETIC BOTTOM | WORKING TEMPERATURE -5°C~50°C | BACKLIGHT

POPULAR MODEL | DISPLAY FLIPS OVER WHEN THE BOTTOM FACES UP | ABSOLUTE LEVEL

DIGITAL LEVEL AND SLOPE METER

VIDEO



2170-1

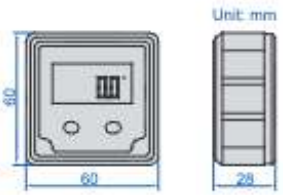

- Used as level and slope meter
- Aluminum frame
- Magnetic bottom
- The display flips over when the bottom faces up
- The backlight is on automatically when in use, and automatically off in 15 seconds after use
- The sea level is permanently set inside the chip, zero setting is not needed when battery is replaced
- Buttons: ON/OFF, ZERO, absolute and incremental measurement
- One AAA battery, automatic power off in 5 minutes

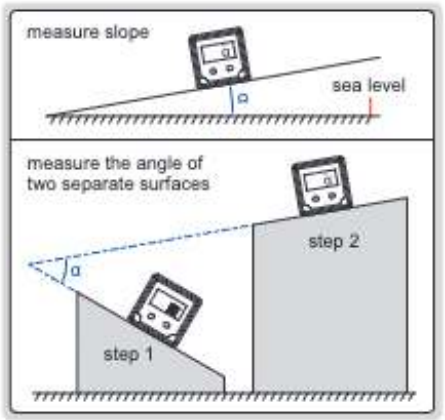

Code	Range	Resolution	Accuracy
2170-1	4x90°	0.1° (≈1.745mm/m)	at 0° and 90°: ±0.1°; at others: ±0.2°

VIDEO

FRAME LEVELS



4902-200

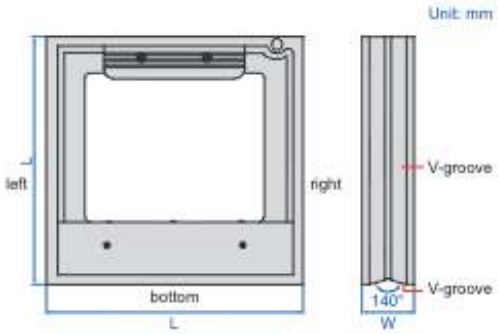

- V-groove on bottom and left for shafts (shafts dia. 15~68mm)
- With transverse vial

Code		Size (L×L)	W
Sensitivity 0.02mm/m (=0.001°)	Sensitivity 0.05mm/m (=0.0029°)		
4902-150	4902-C150	150x150mm	40mm
4902-200	4902-C200	200x200mm	40mm
4902-300	4902-C300	300x300mm	45mm