DIGITAL PROTRACTOR



2171-250

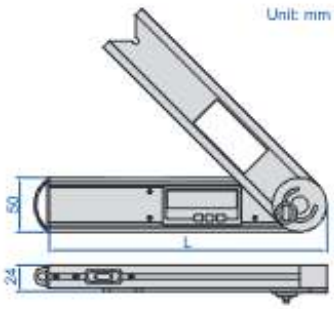



- Buttons: on/off, hold (keep the reading), zero, ABS (absolute and incremental measurement)
- Fix the locking screw at 4 positions for different measuring ranges: 0°~225°, -225°~0°, -45°~180°, -180°~45°
- Remove the locking screw for 360° range
- With level vial
- Battery CR2032, automatic power off



Code	Size (L)	Range	Resolution	Accuracy
2171-250	250mm	0-360°	0.05°	±0.15°

DIGITAL PROTRACTORS



2176-200

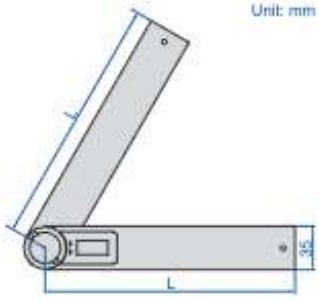

- Buttons: on/off, zero
- With clamping screw to lock the blades
- Graduation of blade: 1mm and 1/32"
- Made of stainless steel
- CR2032 battery
- Automatic power off

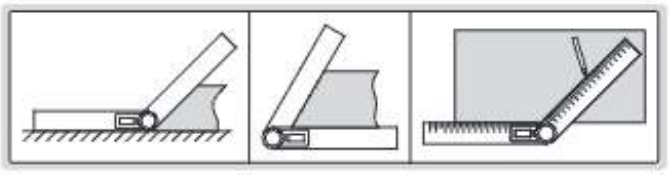

Code	Size (L)	Range	Resolution	Accuracy
2176-200	200mm	0-360°	0.1°	±0.3°
2176-300	300mm	0-360°	0.1°	±0.3°

DIGITAL LEVELS AND SLOPE METERS

REFER TO PAGE
575~579 FOR DETAILS



2179-360



2175-360



2199-1



2170-1