INSPECTION CERTIFICATE

VIDEO

## DIGITAL ANGLE METER
## CODE 2177-121







- Clockwise and counter-clockwise operation
- 9 target angle values can be set, with audible and visible alarm:
  - Green LED light on and buzzer sounds when angle value is 80%~99.5% of target angle
  - Both green and red LED light on and buzzer sounds when angle value is over 99.5% of target angle
- Memory of 250 results, can upload to the computer
- Back with magnet
- Power off in 2 minutes automatically

measurement of angle rotation in any direction (gyro technique)

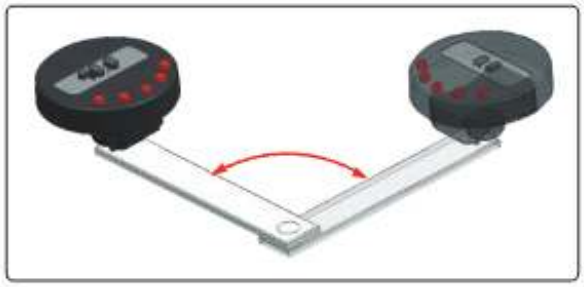

**SPECIFICATION**

| | |
|---|---|
| **Display range** | 0~999° |
| **Setting range** | 1~360° (increment 1°) |
| **Resolution** | 0.1° |
| **Accuracy** | ±2° for 90° rotation @30°/sec |
| **Power supply** | 2×1.5V AAA batteries |
| **Dimension** | 58×58×41mm |
| **Weight** | 70g |

## WATERPROOF DIGITAL PROTRACTOR (HEAVY DUTY)

AUTOMATIC BACKLIGHT | ABSOLUTE LEVEL | IP54 WATERPROOF

Unit: mm

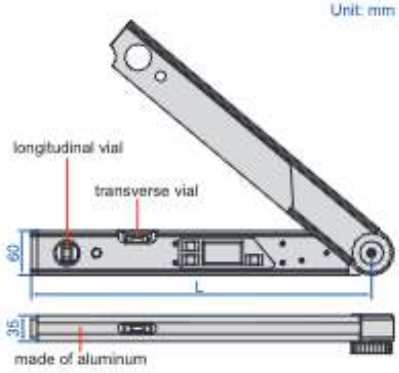




2174-225

- Suitable for setting horizontal and vertical mitre angles of cutting machines
- Buttons: ON/OFF, HOLD/SUP, SPR/CNR/MTR/BVL
- IP54 dust/waterproof
- With transverse and longitudinal vials
- 2xAAA batteries
- Absolute level, zero setting is not needed when batteries are replaced
- Backlight turns off in one minute after reading is stable, automatic power off in 5 minutes

| Code | Size (L) | Range | Resolution | Accuracy |
|---|---|---|---|---|
| 2174-225 | 460mm | 0-225° | 0.05° | ±0.10° |

