DIGITAL RADIUS GAUGES

DATA OUTPUT

VIDEO



2188-55



2188-233



2188-143



2188-323

- Measure radius of external arc, arc angle of measured surface should be larger than 60°
- Display radius value, no need to calculate
- Button function: on/off, zero, data preset, inch/mm
- Keep preset data in memory after restart
- CR2032 battery, automatic power off (time is adjustable)
- Data output
- Stainless steel base
- Optional accessory: setting standards, wireless transmitter code **7315-50M** (receiver is needed)

application

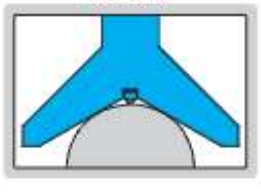

Unit: mm

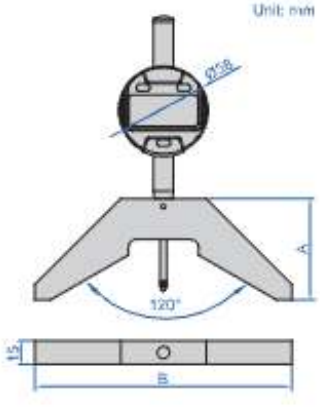

Code	Range (radius)	Resolution	Accuracy	A	B
2188-55	4-53mm/0.16-2.09"	0.01mm/0.0005"	±0.02mm	40mm	65mm
2188-143	48-143mm/1.89-5.63"	0.01mm/0.0005"	±0.03mm	65mm	165mm
2188-233	138-233mm/5.43-9.17"	0.01mm/0.0005"	±0.03mm	85mm	255mm
2188-323	228-323mm/8.98-12.72"	0.01mm/0.0005"	±0.04mm	95mm	345mm

setting standard application



Setting standards

Code	Setting standards	Remark
4110-10D00	setting standard for **2188-55**	included
2188-P143	setting standard for **2188-143**	**optional**
2188-P233	setting standard for **2188-233**	**optional**
2188-P323	setting standard for **2188-323**	**optional**



2188-P143