DIGITAL INTERNAL CALIPER GAUGES

DATA OUTPUT



2121-15

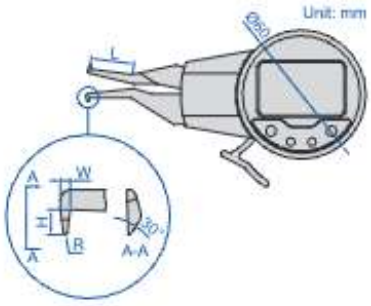

- Resolution: 0.005mm/0.0002"
- Reading in digit and analog
- Display can be rotated by 170°
- Button function: tolerance Go and No-Go display, data preset, max./min. measurement, data holding, inch/metric conversion, absolute/incremental measurement
- CR2032 battery, automatic power off
- Data output
- Optional accessory:
  wireless transmitter code **7315-30** (receiver is needed) page 7



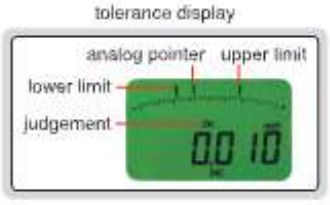

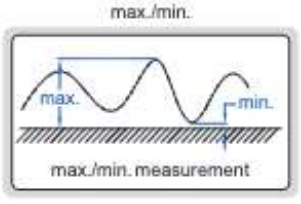

(mm)

Code	Range	Accuracy	Repeatability	L	H	W	R
2121-15	5-15mm/0.2-0.6"	±0.03mm	0.01mm	20	2	1.5	R0.3
2121-25	5-25mm/0.2-1.0"	±0.03mm	0.01mm	35	1.5	1.0	R0.3
2121-31	10-30mm/0.4-1.2"	±0.03mm	0.01mm	55	5.5	2.5	R0.5
2121-41	20-40mm/0.8-1.6"	±0.03mm	0.01mm	80	6.0	3.0	R0.5
2121-51	30-50mm/1.2-2.0"	±0.03mm	0.01mm	80	8.0	3.0	R0.5
2121-61	40-60mm/1.6-2.4"	±0.03mm	0.01mm	80	8.0	3.0	R0.5

INTERNAL DIAL CALIPER GAUGES



2222-15

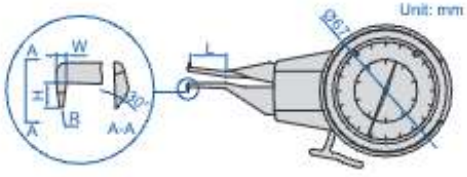

(mm)

Code	Range	Graduation	Accuracy	L	H	W	R
2222-15	5-15mm	0.01mm	±0.03mm	20	2	1.5	R0.3
2222-25	5-25mm	0.01mm	±0.03mm	35	1.5	1.0	R0.3
2222-301	10-30mm	0.01mm	±0.03mm	55	5.5	2.5	R0.5
2222-401	20-40mm	0.01mm	±0.03mm	80	6.0	3.0	R0.5
2222-501	30-50mm	0.01mm	±0.03mm	80	8.0	3.0	R0.5
2222-60	40-60mm	0.01mm	±0.03mm	80	8.0	3.0	R0.5