MEET INTERNATIONAL STANDARD API5B

DIGITAL EXTERNAL THREAD TAPER MEASURING INSTRUMENT

- Measure the taper of external thread
- Digital indicator stroke: 10mm/0.4"
- Optional accessory: wireless transmitter code **7315-50M** (receiver is needed) page 8, ball points (code **6252** series)



2240-10

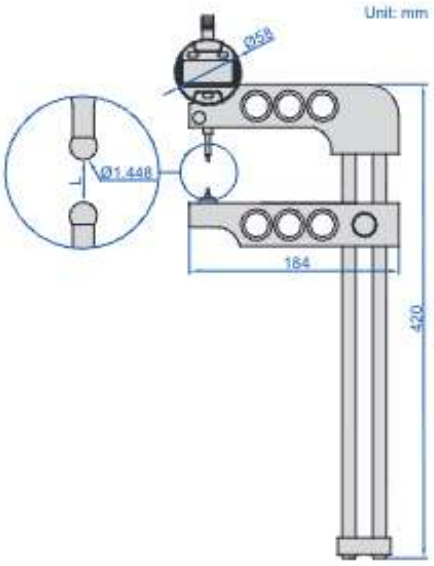

principle of measurement

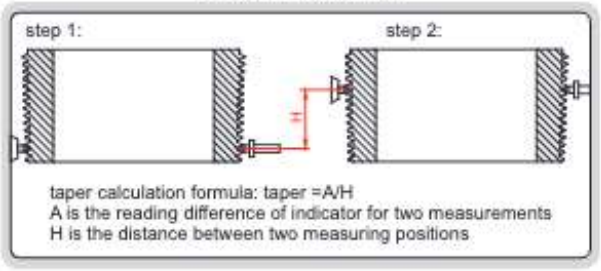

taper calculation formula: taper =A/H
A is the reading difference of indicator for two measurements
H is the distance between two measuring positions

Code	Range (L)	Resolution	Accuracy
2240-10	0-10"/0-254mm	0.0005"/0.01mm	0.03mm

MEET INTERNATIONAL STANDARD API5B

EXTERNAL THREAD TAPER MEASURING INSTRUMENTS

- Measure the taper of external thread
- Dial indicator stroke: 0.5"
- Dial indicator graduation: 0.001"
- Optional accessory: ball points (code **6252** series)



2230-10

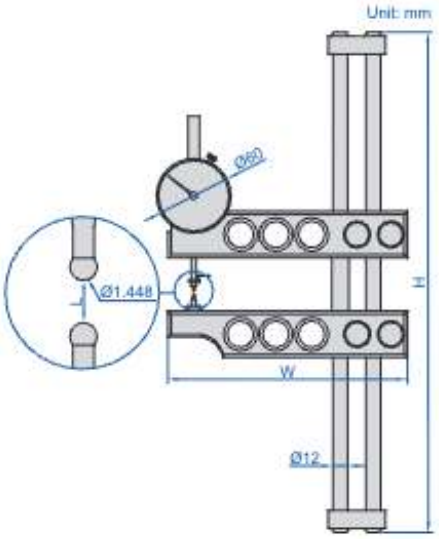

principle of measurement

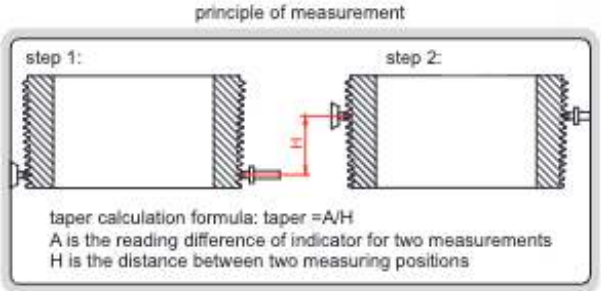

taper calculation formula: taper =A/H
A is the reading difference of indicator for two measurements
H is the distance between two measuring positions

Code	Range (L)	Accuracy	H	W
2230-10	0-10"/0-254mm	0.0015"	400mm	200mm
2230-45	1-4 1/2"/25.4-114.3mm	0.0015"	278mm	178mm
2230-16	1-16"/25.4-406.4mm	0.0015"	600mm	260mm
2230-20	1-20"/25.4-508mm	0.0015"	680mm	260mm