INTERNAL THREAD TAPER MEASURING INSTRUMENTS

MEET INTERNATIONAL STANDARD API5B



2231-6



2231-16

Unit: mm

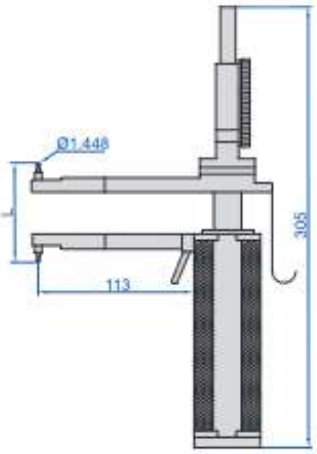

2231-6



2231-16

Unit: mm

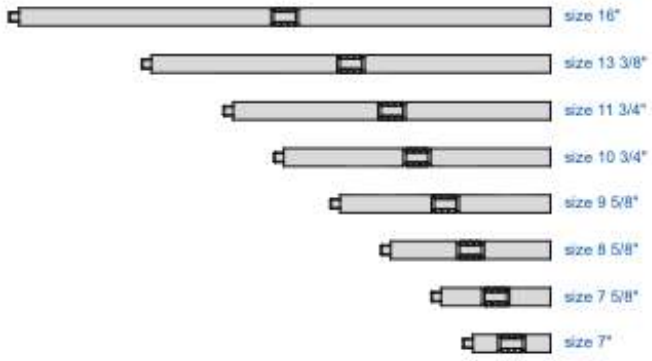

principle of measurement

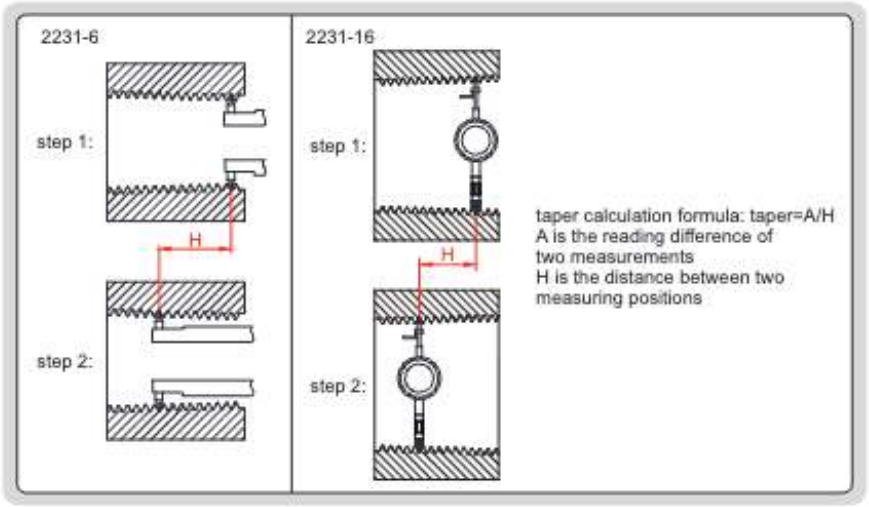

- Measure the taper of internal thread
- Optional accessory: ball points (code **6252** series)

Code	Range (L)	Dial indicator stroke	Dial indicator graduation	Accuracy	Remark
2231-6	1.5-6"/38.1-152.4mm	1"	0.001"	0.0015"	—
2231-16	5 1/2-16"/139.7-406.4mm	0.5"	0.001"	0.0015"	with 9 extension rods