# DIGITAL EXTERNAL THREAD CREST DIAMETER MEASURING INSTRUMENT

MEET INTERNATIONAL STANDARD API5B



2246-5

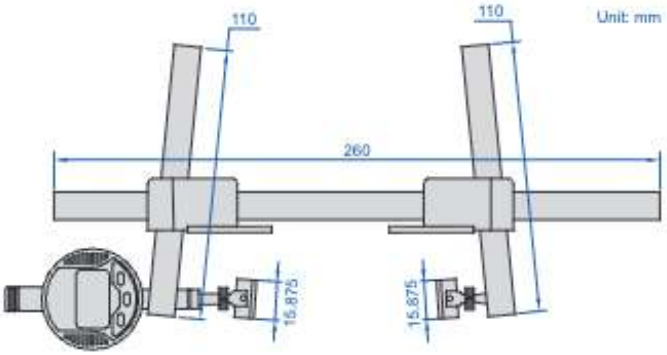


- Measure the crest diameter of external thread with nominal diameter larger than 2 3/8" (60.325mm) and less than 5 1/2" (139.7mm)
- Optional accessory: wireless transmitter code **7315-50M** (receiver is needed) page 8, height standard and zero standard block (code **2236-G□□□**, **2236-K□□□**)

application

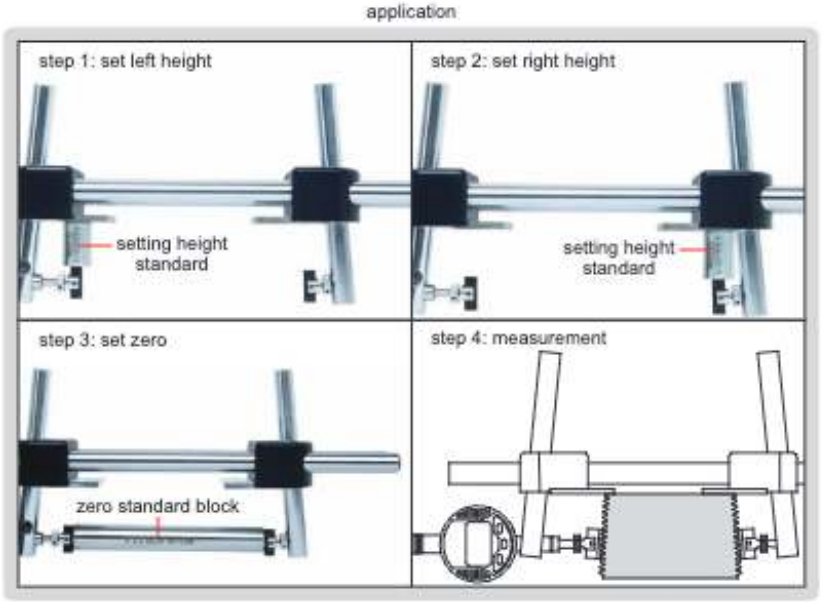


| Code | Range | Digital indicator stroke | Resolution | Accuracy |
|---|---|---|---|---|
| 2246-5 | 2 3/8-5 1/2"/60.325-139.7mm | 0.2"/5mm | 0.0005"/0.01mm | 0.02mm |