REFER TO PAGE 97
FOR DETAILS

DIGITAL DEPTH GAUGE (60° KNIFE EDGE BASE)



front view side view

2143-101

DIGITAL INTERNAL THREAD CREST DIAMETER MEASURING INSTRUMENT

MEET INTERNATIONAL STANDARD API5B

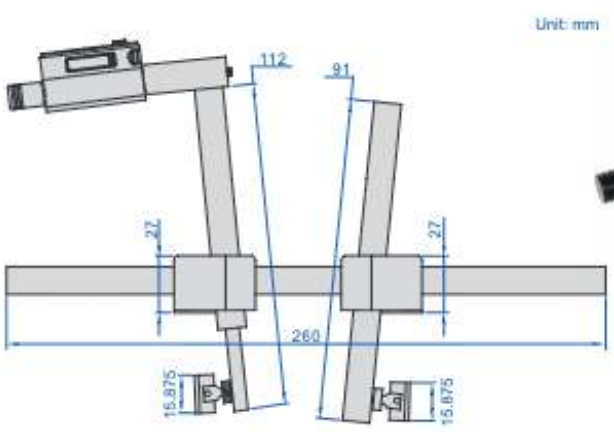



2247-5

application

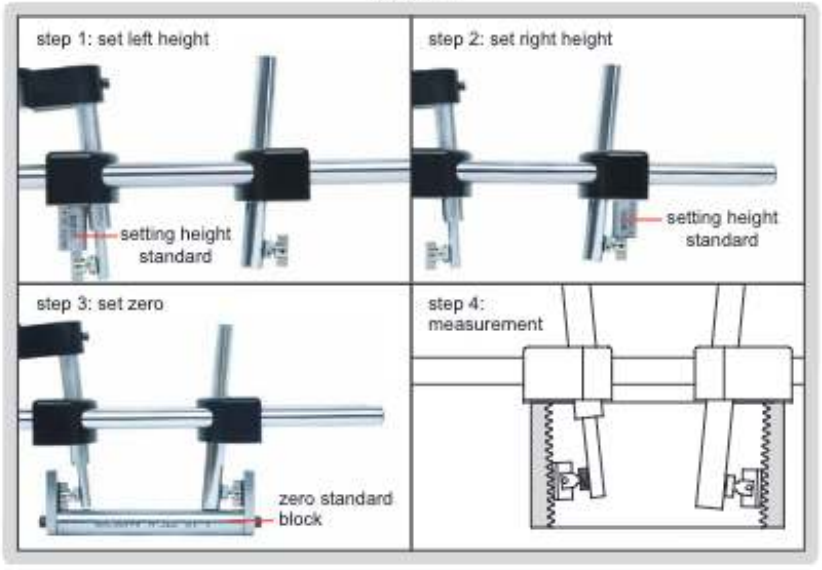

- Measure the crest diameter of internal thread with nominal diameter larger than 2 3/8" (60.325mm) and less than 5 1/2" (139.7mm)
- Optional accessory: wireless transmitter code **7315-50M** (receiver is needed) page 8, height standard and zero standard block (code **2237-G□□□**, **2237-K□□□**)

Code	Range	Digital indicator stroke	Resolution	Accuracy
2247-5	2 3/8-5 1/2"/60.325-139.7mm	0.2"/5mm	0.0005"/0.01mm	0.02mm