DIGITAL GROOVE DIAMETER MEASURING INSTRUMENT

POINT DIAMETER CAN BE CUSTOM-MADE



2261-5

application

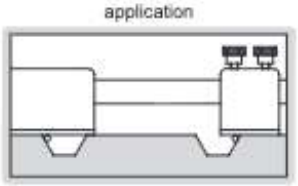

Unit: mm

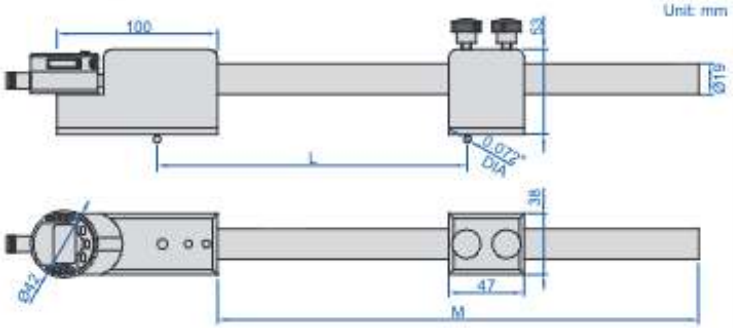

- Measure the groove diameter of flange ring groove
- Point height is adjustable
- Optional accessory:
  wireless transmitter code **7315-50M** (receiver is needed) page 8,
  groove standard block (code **6254**)

Code	Range (L)	Movable point stroke	Resolution	Repeatability	M
2261-5	2.6-13"/66-330mm	0.14"/3.5mm	0.00005"/0.001mm	0.002mm	12"/300mm

Stem (optional)

Code	M
2261-M24	24"/600mm
2261-M30	30"/750mm
2261-M36	36"/900mm

GROOVE DIAMETER MEASURING INSTRUMENTS

POINT DIAMETER CAN BE CUSTOM-MADE



2251-5

application

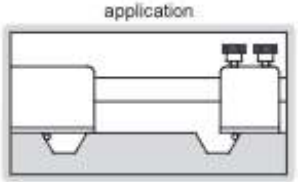

Unit: mm

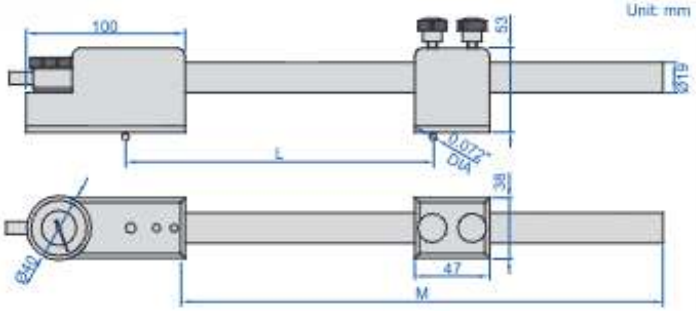

- Measure the groove diameter of flange ring groove
- Point height is adjustable
- Optional: groove standard block (code **6254**)

Code	Range (L)	Movable point stroke	Graduation	Repeatability	M
2251-5	2.6-13"/66-330mm	0.14"/3.5mm	0.01mm	0.005mm	12"/300mm
2251-5E	2.6-13"/66-330mm	0.14"/3.5mm	0.0005"	0.0002"	12"/300mm

Stem (optional)

Code	M
2261-M24	24"/600mm
2261-M30	30"/750mm
2261-M36	36"/900mm