COMBINATION SQUARE (ECONOMIC TYPE)

- Square head (made of zinc):
  set the blade at 90° or 45° to
  an edge of a workpiece
  accuracy: ±0.5°
- Blade (made of stainless steel):
  range: 300mm/12",
  graduation: 1mm and 1/32" on front
  face,1mm and 1/16" on back face



2276-300

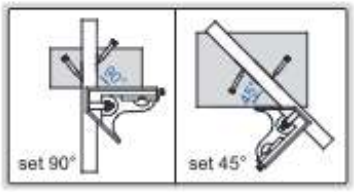

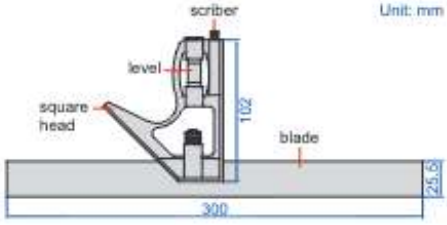

Code
2276-300

COMBINATION SQUARE SET (OPEN TYPE PROTRACTOR)

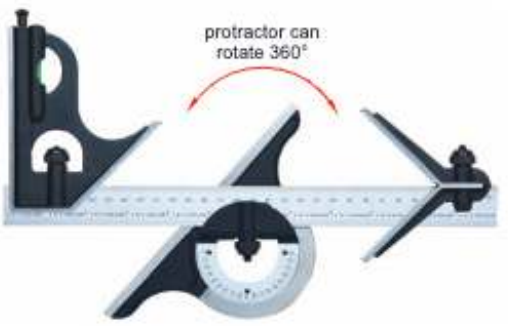

2274-4

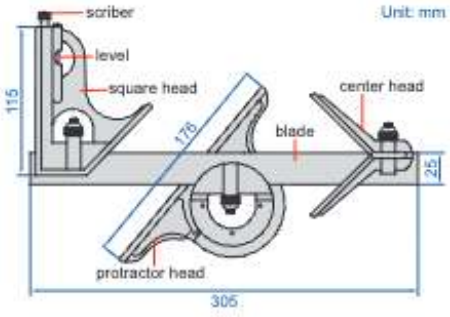

- Center head (made of cast iron):
  to locate center of cylinders with diameter (Ød): 30-100mm
  accuracy: ±0.15mm
- Protractor head (made of cast iron):
  set the blade at desired angle to an edge of a
  workpiece, and can be used to measure angles
  range: 0-180°
  accuracy: ±20min
- Square head (made of cast iron):
  set the blade at 90° or 45° to an edge of a workpiece
  accuracy: ±8min for 90° square,
  ±10min for 45° square
- Blade (made of stainless steel):
  range: 300mm/12",
  graduation: 0.5mm and 1/32" on front face,
  1mm and 1/64" on back face
- Optional accessory: rigid ruler (code **7113**)

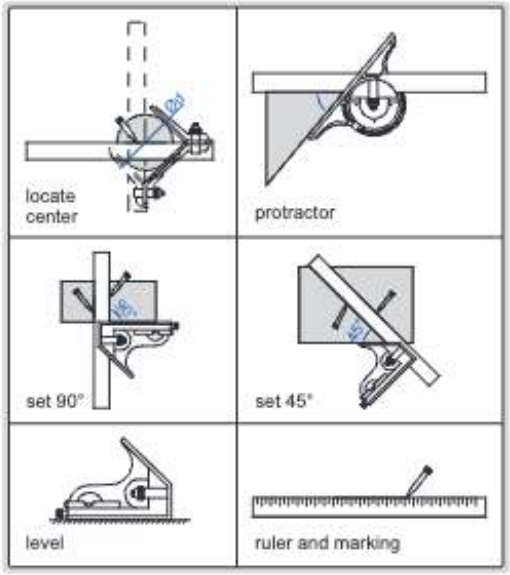

Code	Remark
2274-4	4-piece set