COMBINATION SQUARE SETS (CLOSE TYPE PROTRACTOR)



2278-2



2278-3



2278-180

- Center head (made of cast iron):
  to locate center of cylinders with diameter (Ød): 30-100mm
  accuracy: ±0.15mm
- Protractor head (made of cast iron):
  set the blade at desired angle to an edge of a workpiece, and can be used to measure angles
  range: 0-180°
  accuracy: ±20min.
- Square head (made of cast iron):
  set the blade at 90° or 45° to an edge of a workpiece
  accuracy: ±8min for 90° square,
  ±10min for 45° square
- Blade (made of stainless steel):
  range: 300mm/12",
  graduation: 0.5mm and 1/32" on front face,
  1mm and 1/64" on back face
- Optional accessory: rigid ruler (code **7113**)

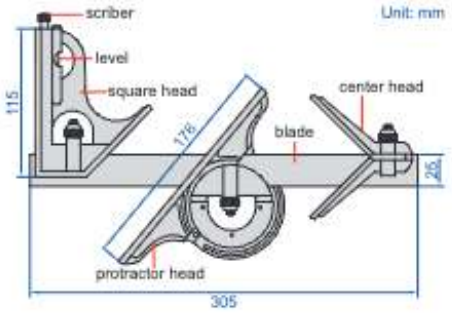

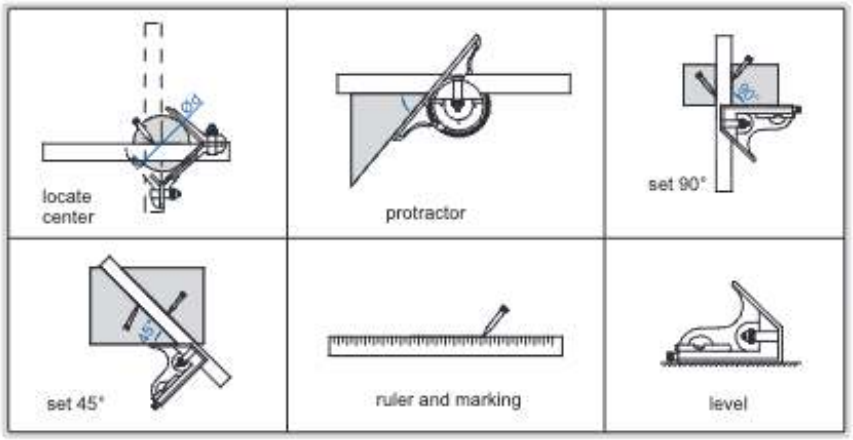

Code	Remark
2278-2	2-piece set
2278-3	3-piece set
2278-180	4-piece set