

2334-155

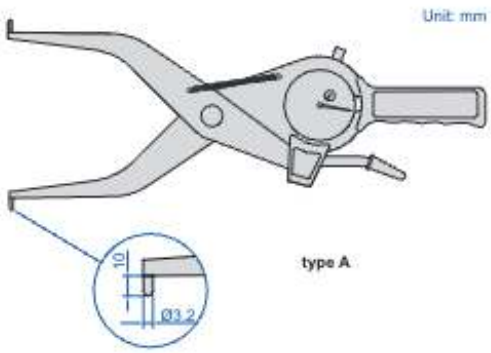

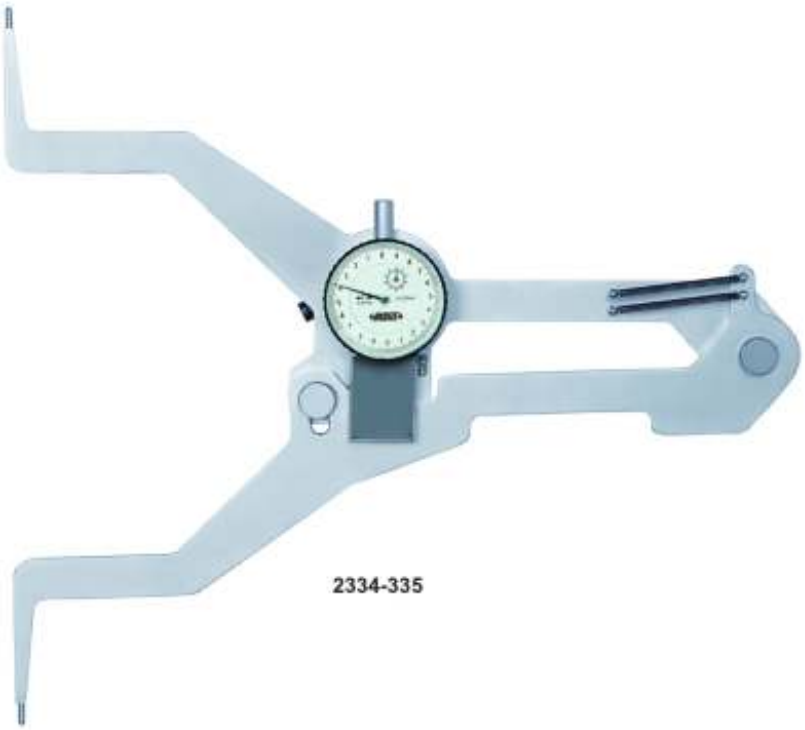

2334-335

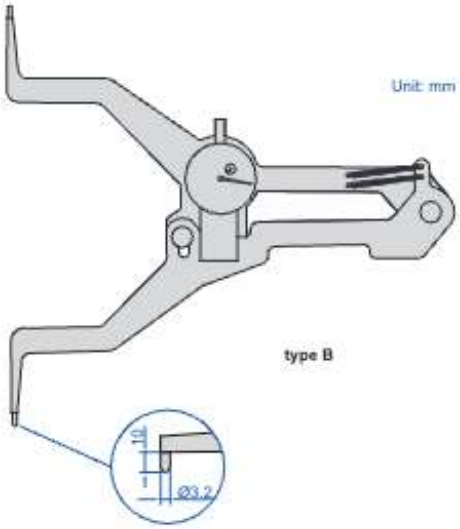

- Carbide measuring tips

(mm)

Code	Range	Graduation	Accuracy	Type	L
2334-155	135-155mm	0.01mm	±0.04mm	A	<200
2334-175	155-175mm	0.01mm	±0.04mm	A	<200
2334-195	175-195mm	0.01mm	±0.04mm	A	<200
2334-215	195-215mm	0.01mm	±0.04mm	A	<200
2334-235	215-235mm	0.01mm	±0.04mm	A	<200
2334-255	235-255mm	0.01mm	±0.04mm	A	<200
2334-275	255-275mm	0.01mm	±0.04mm	A	<200
2334-295	275-295mm	0.01mm	±0.04mm	A	<200
2334-315	295-315mm	0.01mm	±0.04mm	A	<200
2334-335	315-335mm	0.01mm	±0.04mm	B	<200
2334-355	335-355mm	0.01mm	±0.04mm	B	<200
2334-375	355-375mm	0.01mm	±0.04mm	B	<200

