DIAL DEPTH GAUGE

- Accuracy: ±0.017mm
- Stainless steel base
- Supplied with pointed tip and ball tip



2341-101A

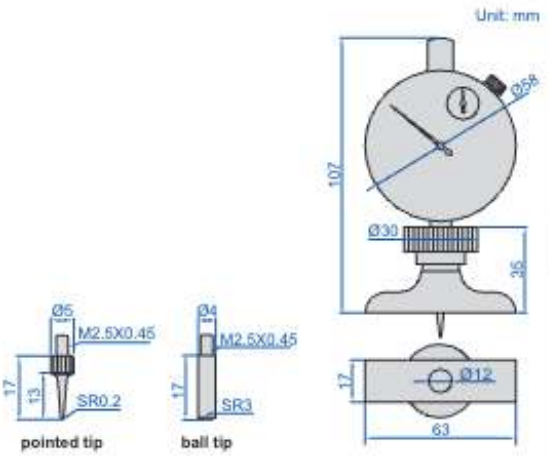

Code	Range	Dial indicator stroke	Dial indicator graduation
2341-101A	0-10mm	10mm	0.01mm

DIAL DEPTH GAUGES



2342-202



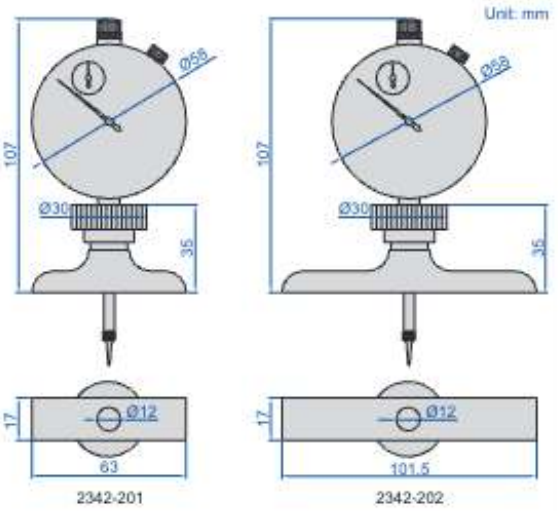



2141-10 (optional), can be customized according to workpieces

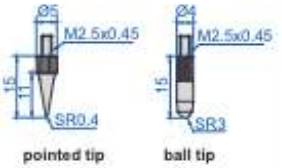

- Dial indicator graduation: 0.01mm
- Accuracy: ±0.03mm
- Stainless steel base
- Extension rods: 25mm (1pc), 50mm (1pc), 75mm (1pc), 100mm (2pcs)
- Supplied with pointed tip and ball tip
- Optional accessory: granite extension holder (code **2141-10**)

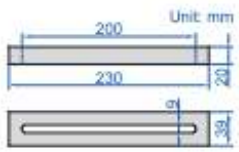

application

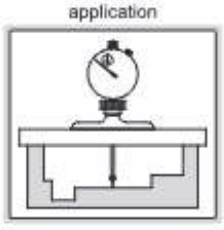

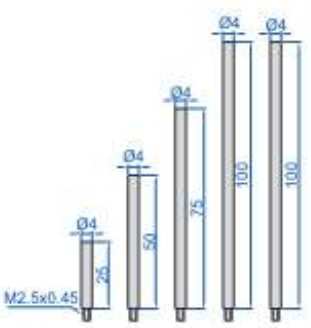

Code	Range	Dial indicator stroke	Base
2342-201	0-300mm	30mm	63×17mm
2342-202	0-300mm	30mm	101.5×17mm