DIGITAL LEATHER THICKNESS GAUGES

DATA OUTPUT

VIDEO



2262-10

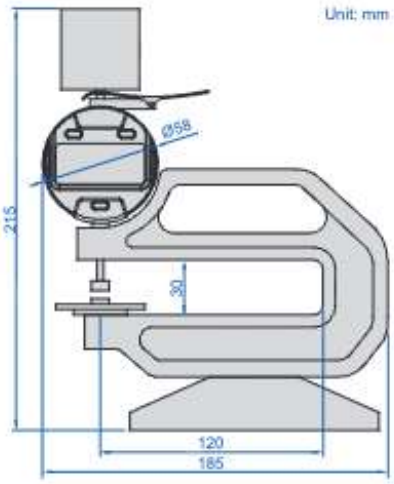

- Measure thickness of leather
- Buttons: on/off, inch/mm, zero, data preset, change measuring direction, absolute/incremental measurement
- Keep preset data in memory after restart
- Battery CR2032, automatic power off (time is adjustable)
- Data output
- Optional accessory: wireless transmitter code **7315-50M** (receiver is needed) page 8

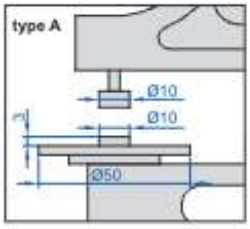

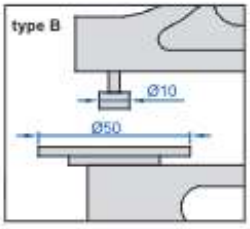

Code	Range	Resolution	Accuracy	Type
2262-10	0-10mm/0-0.4"	0.01mm/0.0005"	±0.02mm	A
2262-10B	0-10mm/0-0.4"	0.01mm/0.0005"	±0.02mm	B

TUBE THICKNESS GAUGE





2367-10A

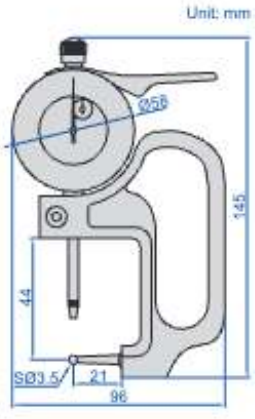

- Measure tube wall thickness

Code	Range	Graduation	Accuracy
2367-10A	0-10mm	0.01mm	±0.02mm