UNIVERSAL PROTRACTOR

clamp for height gauges (**optional**)

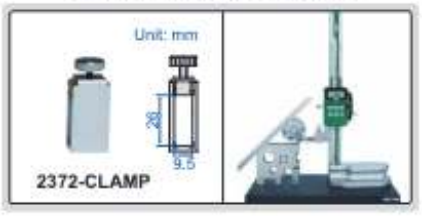



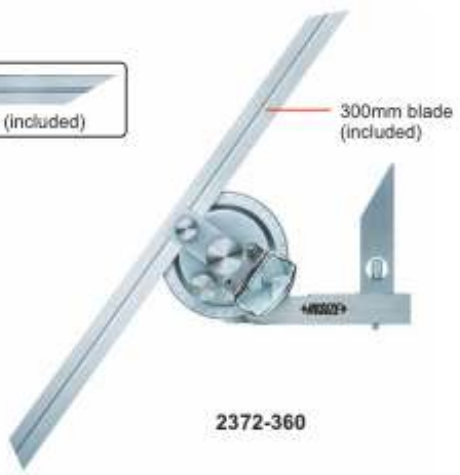

2372-360

- Parallax-free reading
- Made of stainless steel
- Optional accessory: clamp (code **2372-CLAMP**), suitable for height gauges **1156**, **1150-300**, **1351**, **1250** and **1151**

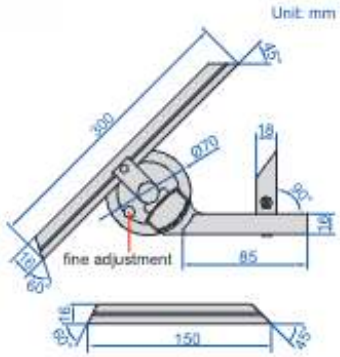

Code	Range	Graduation	Accuracy
2372-360	0-360°	5'	±5'

DIAL PROTRACTOR

clamp for height gauges (**optional**)





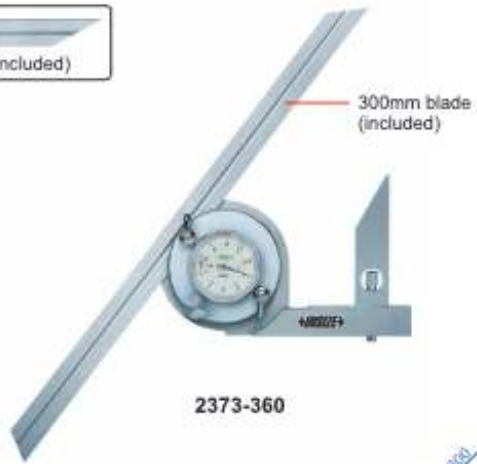

2373-360

- Made of stainless steel
- Optional accessory: clamp (code **2372-CLAMP**), suitable for height gauges **1156**, **1150-300**, **1351**, **1250** and **1151**



Code	Range	Graduation	Accuracy
2373-360	0-360°	5'	±5'