PROTRACTORS

- Graduation: 1°
- Made of carbon steel
- Satin chrome plated scale
- With clamping screw
- The blade is moveable



4797-100

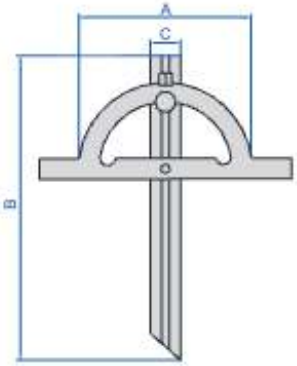

Code	Size (AxB)	Range	Accuracy	C
4797-100	100x150mm	10-170°	±0.3°	18mm
4797-150	150x300mm	10-170°	±0.3°	22mm
4797-200	200x400mm	10-170°	±0.3°	24mm
4797-250	250x500mm	10-170°	±0.3°	28mm
4797-300	300x600mm	10-170°	±0.3°	32mm

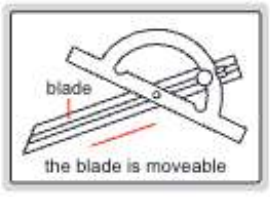

PROTRACTORS



2374-320

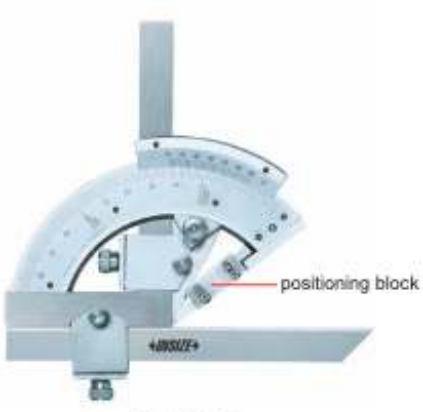

2374-320D

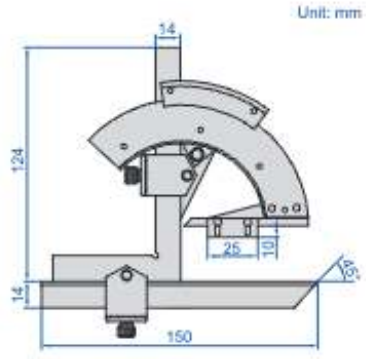

- Made of stainless steel
- Satin chrome plated scale

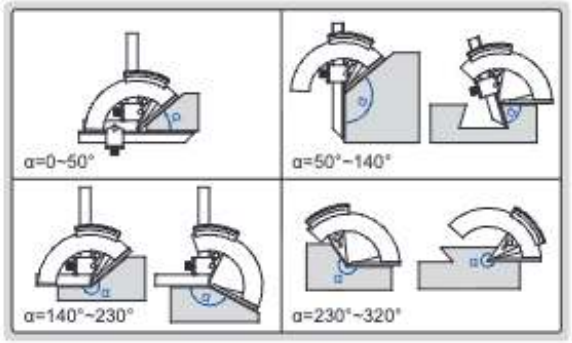

application of **2374-320D**



the positioning block can be moved down for positioning, and moved up when not in use

Code	Range	Graduation	Accuracy	Remark
2374-320	0-320°	2'	±2'	without positioning block
2374-320D	0-320°	2'	±2'	with positioning block