BORE GAUGES

INSIZE PLUS



digital indicator is optional

2422-150

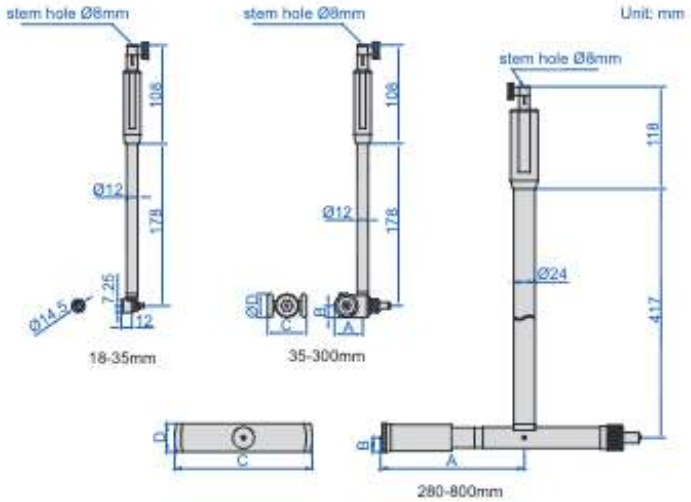

contact points



- Applicable for 0.01mm or 0.001mm graduation dial indicators
- Optional accessory:
  - Dial indicator or dial comparator
  - Setting ring (code **6312**)
  - Long handle (code **7352**)
  - Bore gauge setter

Code	Range	Accuracy (without dial comparator)	Repeatability (without dial comparator)
2422-35	18-35mm	4μm	2μm
2422-60	35-60mm	4μm	2μm
2422-150	50-150mm	4μm	2μm
2422-300	150-300mm	4μm	2μm
2422-510	280-510mm	3μm	1.5μm
2422-800	400-800mm	3μm	1.5μm

Code	A	B	C	D
2422-60	19.5mm	10.5mm	28mm	21mm
2422-150	30.8mm	13mm	42.5mm	26mm
2422-300	30.8mm	13mm	76.5mm	26mm
2422-510	164mm	16mm	156mm	32mm
2422-800	305mm	18mm	300mm	36mm