DATA OUTPUT

VIDEO

LARGE RANGE DIGITAL RADIUS GAUGES



2512-300

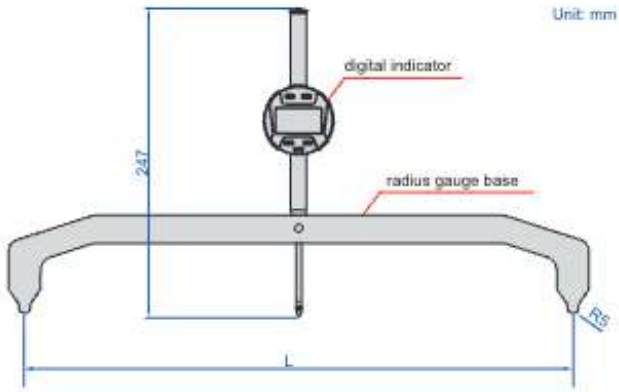

- Measure radius of internal or external arcs
- Resolution: 0.01mm/0.001"
- Buttons: on/off, hold, mm/inch, s (select jaws), zero
- Display can be rotated by 320°
- Battery CR2032, automatic power off (time is adjustable)
- Data output
- Optional accessory:
  wireless transmitter code **7315-50M** (receiver is needed) page 8

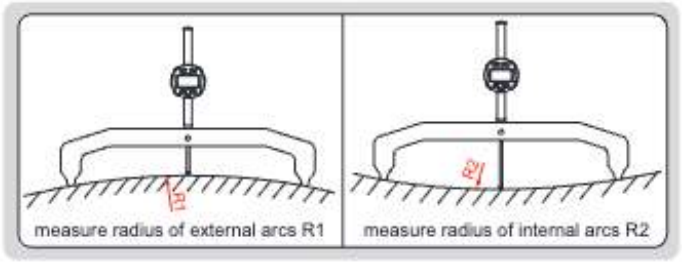

8

Radius gauges (with digital indicator)

Code	Range of external radius (R1)	Range of internal radius (R2)	Accuracy (mm)*	L
2512-100	100-625mm/4-24.606"	100-625mm/4-24.606"	±0.005R	100mm
2512-200	300-2500mm/11.811-98.425"	300-2500mm/11.811-98.425"	±0.005R	200mm
2512-300	500-11250mm/19.685-442.913"	500-11250mm/19.685-442.913"	±0.005R	300mm
2512-400	1100-15000mm/43.307-590"	1100-15000mm/43.307-590"	±0.005R	400mm

*R is the radius to be measured. For example, radius is 100mm, the accuracy is ±0.005×100=±0.5mm

Radius gauge bases (without digital indicator)

Code	Range of external radius (R1)	Range of internal radius (R2)	Accuracy (mm)*	L	Material
2512-100-BASE	100-625mm/4-24.606"	100-625mm/4-24.606"	±0.005R	100mm	stainless steel
2512-200-BASE	300-2500mm/11.811-98.425"	300-2500mm/11.811-98.425"	±0.005R	200mm	stainless steel
2512-300-BASE	500-11250mm/19.685-442.913"	500-11250mm/19.685-442.913"	±0.005R	300mm	stainless steel
2512-400-BASE	1100-15000mm/43.307-590"	1100-15000mm/43.307-590"	±0.005R	400mm	stainless steel

*R is the radius to be measured. For example, radius is 100mm, the accuracy is ±0.005×100=±0.5mm

Digital indicator

Code	Range	Resolution	Accuracy	Repeatability
2512-50F	0-50.8mm/0-2"	0.01mm/0.001"	5μm	5μm