DIGITAL THICKNESS GAUGE



2710-25



- Resolution: 0.01mm, 0.001", 1/64"
- Buttons: on/off, zero, unit (mm/in/fraction), data hold
- Battery CR2032, automatic power off



Code	Range	Accuracy	Repeatability
2710-25	0-25.4mm/0-1"	0.05mm	0.02mm

DIGITAL GEOMEMBRANE THICKNESS GAUGE

DATA OUTPUT

VIDEO



2259-10

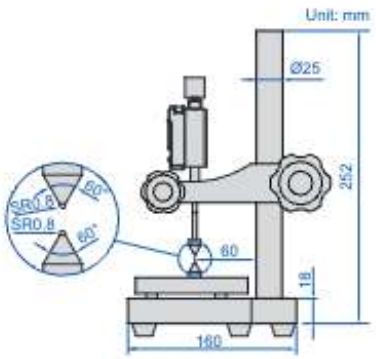

- Measure thickness of geomembranes
- Button function: on/off, inch/mm, zero, data preset, change measuring direction, absolute/incremental measurement
- CR2032 battery, automatic power off (time is adjustable)
- Supplied with dust cover
- Optional accessory: wireless transmitter code **7315-50M** (receiver is needed) page 8

Code	Range	Resolution	Accuracy	Pressure
2259-10	12.7mm/0.5"	0.001mm/0.00005"	5μm	0.56±0.05N