DIGITAL THICKNESS GAUGES (WITH BASE)

DATA OUTPUT

measuring tips and anvils can be custom-made



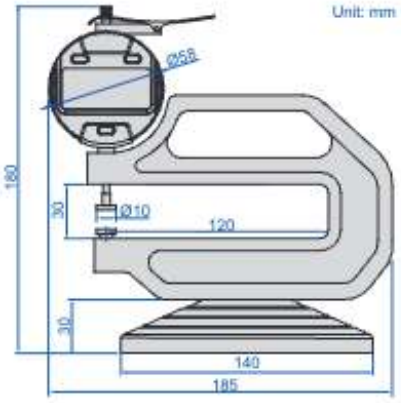



2674-10

- Ceramic spindle tip and anvil
- Buttons: on/off, inch/mm, zero, data preset, change measuring direction, absolute/incremental measurement
- Keep preset data in memory after restart
- Battery CR2032, automatic power off (time is adjustable)
- Data output
- Optional accessory: wireless transmitter code **7315-50M** (receiver is needed) page 8

Code	Range	Resolution	Accuracy
2674-10	0-10mm/0-0.4"	0.01mm/0.0005"	±0.02mm
2674-101	0-10mm/0-0.4"	0.001mm/0.00005"	±0.01mm

DIGITAL THICKNESS GAUGES

DATA OUTPUT

measuring tips and anvils can be custom-made



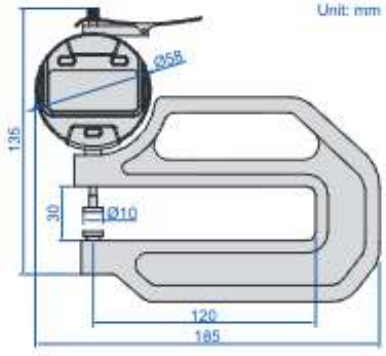



2872-10

- Ceramic spindle tip and anvil
- Buttons: on/off, inch/mm, zero, data preset, change measuring direction, absolute/incremental measurement
- Keep preset data in memory after restart
- Battery CR2032, automatic power off (time is adjustable)
- Data output
- Optional accessory: wireless transmitter code **7315-50M** (receiver is needed) page 8

Code	Range	Resolution	Accuracy
2872-10	0-10mm/0-0.4"	0.01mm/0.0005"	±0.02mm
2872-101	0-10mm/0-0.4"	0.001mm/0.00005"	±0.01mm