DIGITAL TUBE THICKNESS GAUGES

DATA OUTPUT

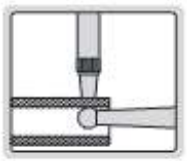

- Buttons: on/off, inch/mm, zero, data preset, change measuring direction, absolute/incremental measurement
- Keep preset data in memory after restart
- Battery CR2032, automatic power off (time is adjustable)
- Data output
- Optional accessory: wireless transmitter code **7315-50M** (receiver is needed) page 8

Code	Range	Resolution	Accuracy
2876-10	0-10mm/0-0.4"	0.01mm/0.0005"	±0.02mm
2876-101	0-10mm/0-0.4"	0.001mm/0.00005"	±0.005mm



2876-10

Unit: mm



DIGITAL TUBE THICKNESS GAUGES

DATA OUTPUT



measure wall thickness of grooves

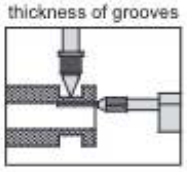

- Buttons: on/off, inch/mm, zero, data preset, change measuring direction, absolute/incremental measurement
- Keep preset data in memory after restart
- Battery CR2032, automatic power off (time is adjustable)
- Data output
- Optional accessory: wireless transmitter code **7315-50M** (receiver is needed) page 8

Code	Range	Resolution	Accuracy
2873-10	0-10mm/0-0.4"	0.01mm/0.0005"	±0.02mm
2873-101	0-10mm/0-0.4"	0.001mm/0.00005"	±0.005mm



2873-10

Unit: mm

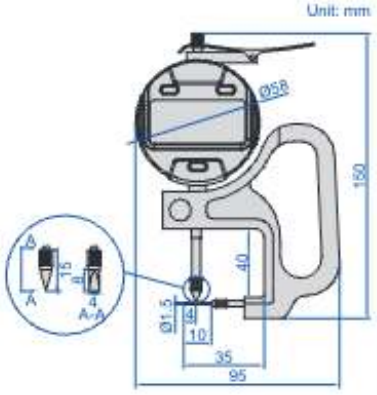

DIGITAL TUBE THICKNESS GAUGES

DATA OUTPUT



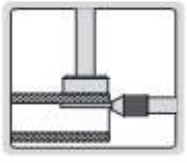

- Buttons: on/off, inch/mm, zero, data preset, change measuring direction, absolute/incremental measurement
- Keep preset data in memory after restart
- Battery CR2032, automatic power off (time is adjustable)
- Data output
- Optional accessory: wireless transmitter code **7315-50M** (receiver is needed) page 8

Code	Range	Resolution	Accuracy
2859-10	0-10mm/0-0.4"	0.01mm/0.0005"	±0.02mm
2859-101	0-10mm/0-0.4"	0.001mm/0.00005"	±0.005mm



2859-101

Unit: mm

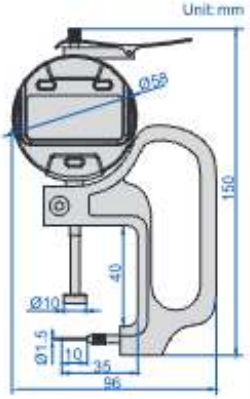

11