HIGH PRECISION DIGITAL THICKNESS GAUGES

VIDEO

ATTENTION: RECHARGEABLE BATTERY, FOR 12 HOURS CONTINUOUS WORKING

DATA OUTPUT

MEASURING TIPS AND ANVILS CAN BE CUSTOM-MADE

ABSOLUTE ENCODER, THE ORIGINAL DATA REMAINS AFTER POWER OFF



2879-10



2879-30



2879-60

Unit: mm

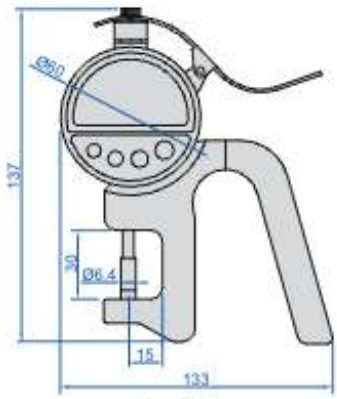

2879-10
2879-101

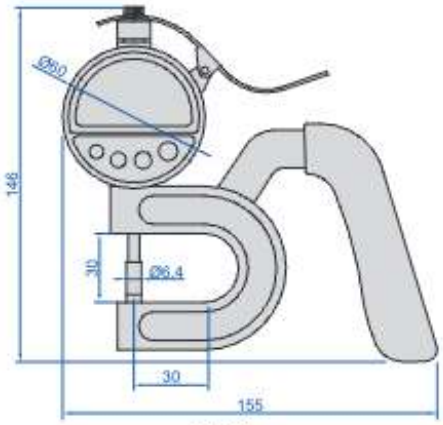

2879-30

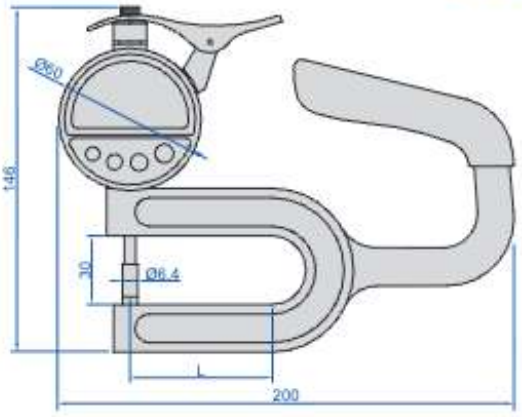

2879-60
2879-100

- Absolute encoder, the original data remains after power off
- Button function: on/off, zero, tolerance, absolute/incremental measurement, max./min./TIR, data preset, mm/inch, data output, data hold
- Reading in digital and analog
- Power: rechargeable battery, for 12 hours continuous working
- Data output
- Supplied with data output cable (keyboard format)

Code	Range	Resolution	Accuracy	Repeatability	Measuring force	L
2879-10	0-10mm/0-0.4"	0.001mm/0.00005"	±0.002mm	0.001mm	0.5-1N	—
2879-101	0-10mm/0-0.4"	0.0005mm/0.00002"	±0.0015mm	0.0005mm	0.5-1N	—
2879-30	0-10mm/0-0.4"	0.001mm/0.00005"	±0.002mm	0.001mm	0.5-1N	—
2879-60	0-10mm/0-0.4"	0.001mm/0.00005"	±0.003mm	0.001mm	0.5-1N	60mm
2879-100	0-10mm/0-0.4"	0.001mm/0.00005"	±0.004mm	0.001mm	0.5-1N	100mm