ANTI MAGNETIC CARBIDE CONTACT POINT

INSPECTION CERTIFICATE

PRECISION DIAL TEST INDICATOR

INSIZE PLUS



2897-02

- Meet DIN2270
- Ceramic bearing
- Anti magnetic carbide contact point
- Two measuring directions
- Supplied with one clamp: diameter Ø8mm
- Optional accessory: styli (page 279)

clamp (included)

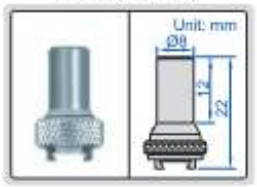

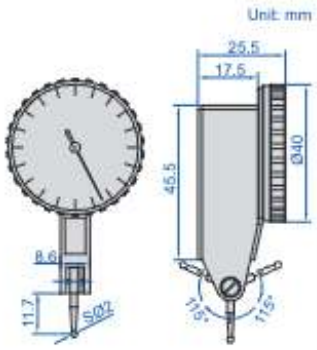

Code	Range	Graduation	Accuracy	Hysteresis	Dial reading
2897-02*	0.2mm	0.001mm	4μm	2μm	0-100-0

*Supplied with manufacturer inspection certificate

INSPECTION CERTIFICATE

PRECISION DIAL TEST INDICATORS

INSIZE PLUS



2880-02

- Meet DIN2270
- Ceramic bearing
- Two measuring directions
- Supplied with one clamp: diameter Ø8mm
- Optional accessory: styli (page 279)



ruby contact point of **2880-02R**



clamp (included)

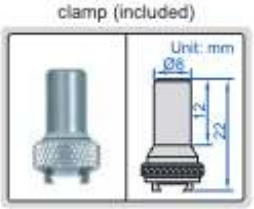

Code	Range	Graduation	Accuracy	Hysteresis	Dial reading	Remark
2880-02*	0.2mm	0.002mm	4μm	2μm	0-100-0	anti magnetic carbide contact point
2880-02R*	0.2mm	0.002mm	4μm	2μm	0-100-0	ruby contact point

*Supplied with manufacturer inspection certificate

JEWELED BEARING

INSPECTION CERTIFICATE

DIAL TEST INDICATORS

10

clamp (included)



POPULAR MODEL



2380-08

- Meet DIN2270 (except **2380-02**, **2381-02**, **2381-021**)
- Jeweled bearing
- Carbide contact point
- Two measuring directions
- Anti magnetic body
- Supplied with two clamps: diameter Ø4mm and Ø8mm
- Optional accessory: styli (page 279)

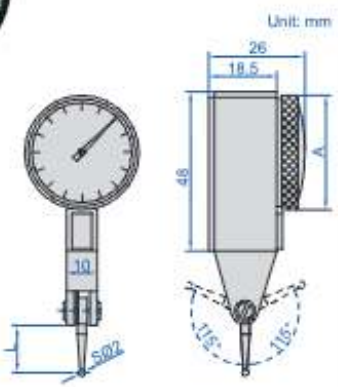

(mm)

Code	Range	Graduation	Accuracy	Hysteresis	Dial reading	A	L
2380-08*	0.8mm	0.01mm	13μm	3μm	0-40-0	Ø30	13.5
2381-08*	0.8mm	0.01mm	13μm	3μm	0-40-0	Ø37	13.5
2380-02*	0.2mm	0.002mm	6μm	2μm	0-100-0	Ø30	12.5
2381-02*	0.2mm	0.002mm	6μm	2μm	0-100-0	Ø37	12.5
2381-021*	0.2mm	0.001mm	6μm	2μm	0-100-0	Ø37	12.5

*Supplied with manufacturer inspection certificate