CHAMFER HEIGHT GAUGE

INSIZE PLUS

principle of measurement

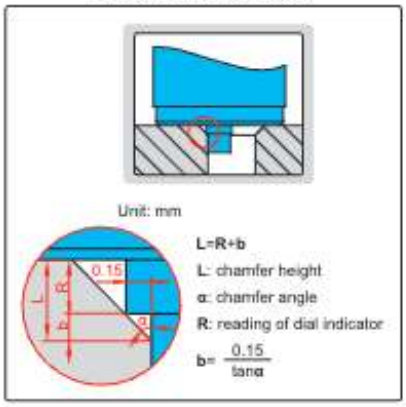



Unit: mm

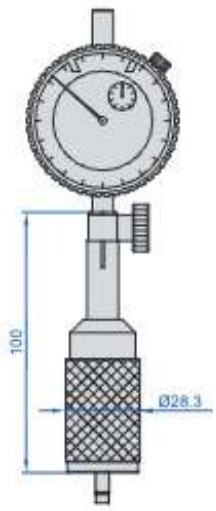

2943-1

setting gauge (included)



- Measure outside or inside chamfer height
- Suitable for diameter of bores≥6mm, chamfer angle α≥30°
- Setting gauge is included

Code	Range (L)	Graduation	Accuracy
2943-1	0.2-5mm	0.01mm	±0.02mm

DIGITAL CHAMFER HEIGHT GAUGE

DATA OUTPUT

INSIZE PLUS

principle of measurement

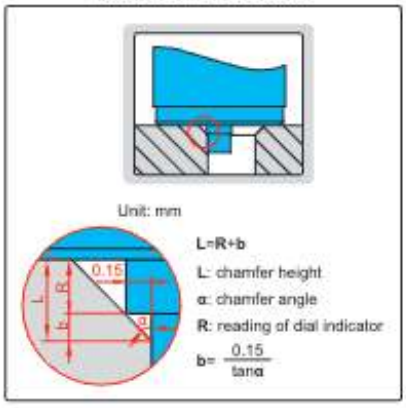



Unit: mm

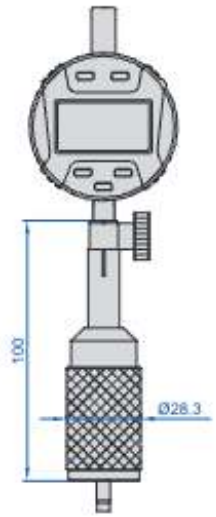

2944-1

setting gauge (included)



- Measure outside or inside chamfer height
- Suitable for diameter of bores≥6mm, chamfer angle α≥30°
- Resolution: 0.01mm/0.0005"
- Setting gauge is included
- Optional accessory: wireless transmitter code **7315-50M** (receiver is needed) page 8

Code	Range (L)	Accuracy
2944-1	0.2-5mm/0.008-0.197"	±0.02mm