LONG SPINDLE OUTSIDE MICROMETERS



3209-25

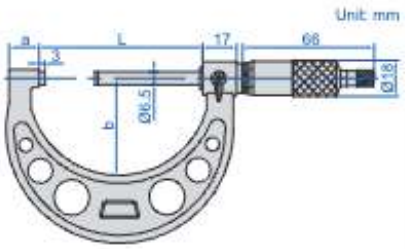

- Graduation 0.01mm
- Carbide measuring faces
- Meet DIN863-1
- Ratchet stop
- Supplied with setting standards (except 0-25mm)

Code	Range	Accuracy	L	a	b
3209-25	0-25mm	4μm	57mm	14mm	38mm
3209-50	25-50mm	4μm	82mm	15mm	49mm
3209-75	50-75mm	5μm	107mm	15mm	60mm
3209-100	75-100mm	5μm	133mm	16.5mm	73mm

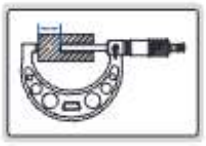

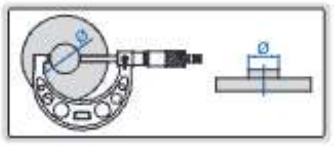

6

OUTSIDE MICROMETERS (STEEL PLATE FRAME)

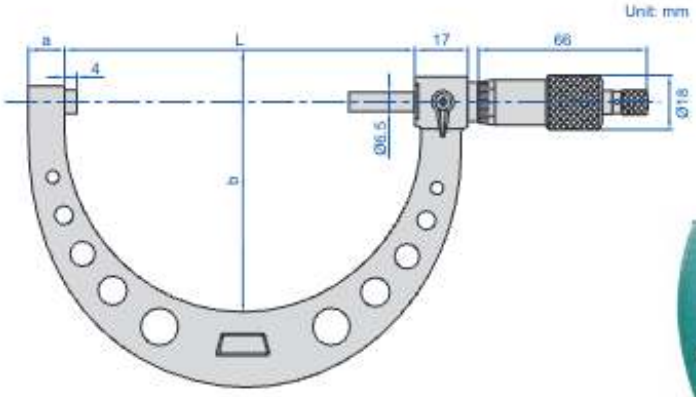



3216-425

- Graduation: 0.01mm
- Carbide measuring faces
- Meet DIN863-1
- Ratchet stop
- Supplied with setting standards

(mm)

Code	Range	Accuracy	L	a	b
3216-325	300-325mm	10μm	338	20	176
3216-350	325-350mm	10μm	364	20	192
3216-375	350-375mm	11μm	389	20	202
3216-400	375-400mm	11μm	414	20	217
3216-425	400-425mm	12μm	440	20	226
3216-450	425-450mm	12μm	465	20	241
3216-475	450-475mm	13μm	491	20	255
3216-500	475-500mm	13μm	516	20	268



setting standard (included)