ATTENTION: NOT SUITABLE FOR 0.001MM DIAL INDICATORS

MICROMETERS WITH DIAL INDICATOR



3296-100A

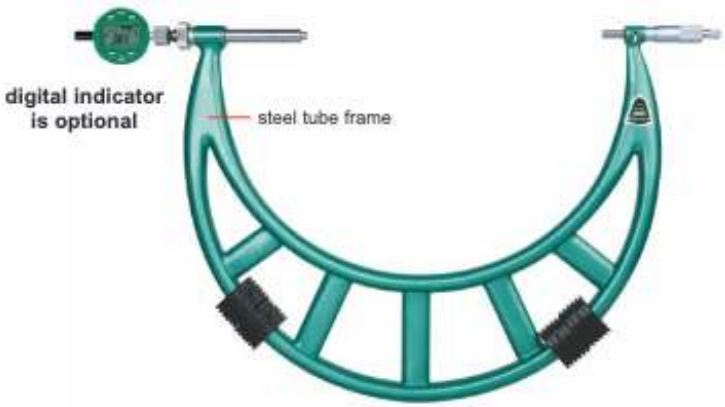

3296-400A

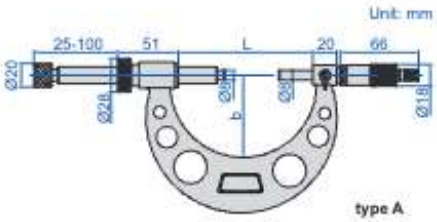

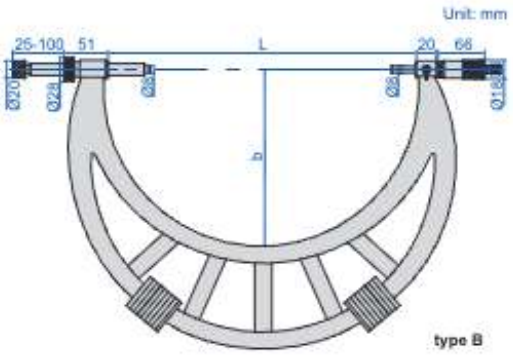

(mm)

Code	Range	Type	Accuracy	L	b
3296-100A	0-100mm	A	6μm	115	68
3296-200A	100-200mm	A	7μm	215	120
3296-300A	200-300mm	A	8μm	315	170
3296-400A	300-400mm	B	9μm	415	225
3296-500A	400-500mm	B	10μm	515	275
3296-600A	500-600mm	B	11μm	615	325
3296-700A	600-700mm	B	12μm	715	375
3296-800A	700-800mm	B	13μm	815	430
3296-900A	800-900mm	B	14μm	915	480
3296-1000A	900-1000mm	B	15μm	1015	530

- Meet DIN863-3
- Graduation 0.01mm
- Ratchet stop
- Carbide measuring faces
- Supplied with setting standards
- Optional accessory: dial indicators (graduation 0.01mm) digital indicators (resolution 0.01mm/0.0005")

GROOVE MICROMETERS



3287-50B

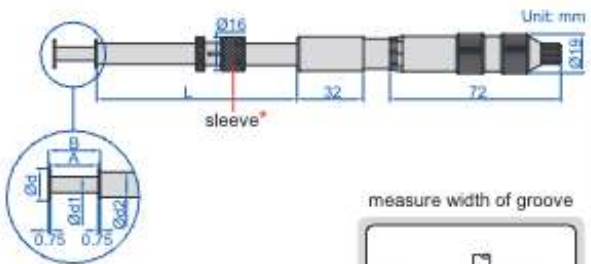

- Measure width of grooves inside bores
- Graduation 0.01mm
- Two graduations for inside and outside measurements
- Non-rotating spindle
- Two-directional ratchet stop

(mm)

Code	Range (outside A)	Range (inside B)	Accuracy	L	Ød	Ød1	Ød2
3287-25B	0-25mm	1.6-26.5mm	10μm	102	13	6.5	10
3287-50B	25-50mm	26.5-51.5mm	10μm	102	13	6.5	10
3287-75B	50-75mm	51.5-76.5mm	10μm	102	13	6.5	10
3287-100B	75-100mm	76.5-101.5mm	10μm	102	13	6.5	10
3287-125B	100-125mm	101.5-126.5mm	15μm	102	13	6.5	10
3287-150B	125-150mm	126.5-151.5mm	15μm	102	13	6.5	10
3287-251B*	0-25mm	1.6-26.5mm	10μm	90	6.5	3	5

*3287-251B does not have sleeve

measure width of groove

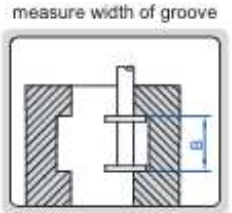

measure width of keyway

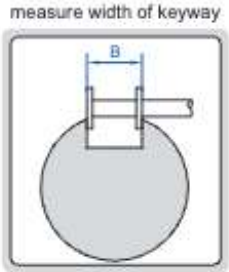

measure position of groove

