DIGITAL MICROMETERS/SNAP GAUGES

IP65 WATERPROOF

ABSOLUTE ENCODER, THE ORIGINAL DATA REMAINS AFTER POWER OFF

VIDEO

ONE TURN OF SLEEVE MAKES 5MM SPINDLE FEED. PRESS THE FORK, THE SPINDLE RETRACTS 3MM

ATTENTION: RECHARGEABLE BATTERY, FOR 24 HOURS CONTINUOUS WORKING

NON-ROTATING SPINDLE

DATA OUTPUT

MEASUREMENT ACCURACY IS NOT AFFECTED BY THE USE OF SLEEVE

INSPECTION CERTIFICATE



3351-275

- Absolute encoder, the original data remains after power off
- Adjustable resolution: 0.0002mm/0.00001"
  (when the reading exceeds 100mm, the resolution is automatically switched to 0.001mm)
  0.001mm/0.00005"
  0.01mm/0.0005
- One turn of sleeve makes 5mm spindle feed
- Measurement accuracy is not affected by the use of sleeve
- Press the fork, the spindle retracts 3mm
- Linear ball bearings for ten million times use
- Carbide measuring faces
- Measuring force 5-10N
  Customizable measuring force range 2-12N
  Attention: small measuring force will reduce the dustproof and waterproof level
- Button function: data output, tolerance, data preset, data hold, measuring direction change, max./min./TIR, power off time, on/off, zero, mm/inch, adjust resolution
- Supplied with gauge blocks for zero setting
- Power: rechargeable battery, for 24 hours continuous working

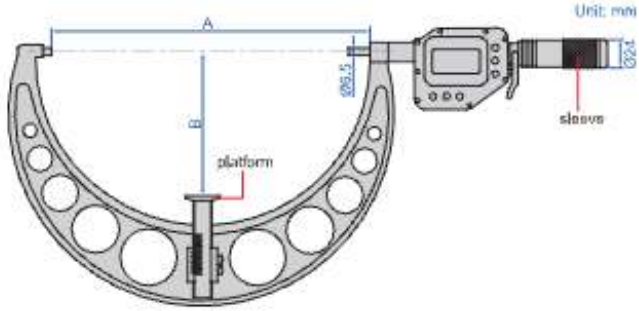

With data interface (optional wireless transmitter code 7315-3350, receiver is needed page 9)

Code	Range	Accuracy	Repeatability	Measuring faces		A	B
				flatness	parallelism		
3351-125*	100-125mm/4-5"	3μm	1μm	0.5μm	2μm	128mm	62.5mm
3351-150*	125-150mm/5-6"	3μm	1μm	0.5μm	2μm	153mm	75mm
3351-175*	150-175mm/6-7"	4μm	1μm	0.5μm	2.5μm	178mm	87.5mm
3351-200*	175-200mm/7-8"	4μm	1μm	0.5μm	2.5μm	203mm	100mm
3351-225*	200-225mm/8-9"	5μm	1μm	0.5μm	3μm	228mm	112.5mm
3351-250*	225-250mm/9-10"	5μm	1μm	0.5μm	3μm	253mm	125mm
3351-275*	250-275mm/10-11"	6μm	1μm	0.5μm	3.5μm	278mm	137.5mm
3351-300*	275-300mm/11-12"	6μm	1μm	0.5μm	3.5μm	303mm	150mm

gauge blocks for zero setting (included)



Built-in wireless (receiver code 7315-2/3/6/7/8/9 is needed)

Code	Range	Accuracy	Repeatability	Measuring faces		A	B
				flatness	parallelism		
3351-125AWL*	100-125mm/4-5"	3μm	1μm	0.5μm	2μm	128mm	62.5mm
3351-150AWL*	125-150mm/5-6"	3μm	1μm	0.5μm	2μm	153mm	75mm
3351-175AWL*	150-175mm/6-7"	4μm	1μm	0.5μm	2.5μm	178mm	87.5mm
3351-200AWL*	175-200mm/7-8"	4μm	1μm	0.5μm	2.5μm	203mm	100mm
3351-225AWL*	200-225mm/8-9"	5μm	1μm	0.5μm	3μm	228mm	112.5mm
3351-250AWL*	225-250mm/9-10"	5μm	1μm	0.5μm	3μm	253mm	125mm
3351-275AWL*	250-275mm/10-11"	6μm	1μm	0.5μm	3.5μm	278mm	137.5mm
3351-300AWL*	275-300mm/11-12"	6μm	1μm	0.5μm	3.5μm	303mm	150mm

alarm when over tolerance

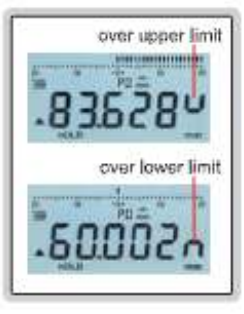

*Supplied with manufacturer inspection certificate