CARBON FIBER BORE GAUGES

SPRING LOADED MEASURING POINT

CARBON FIBER EXTENSION RODS, LIGHT WEIGHT, NOT EASY TO DEFORM, LOW THERMAL EXPANSION

DATA OUTPUT

VIDEO

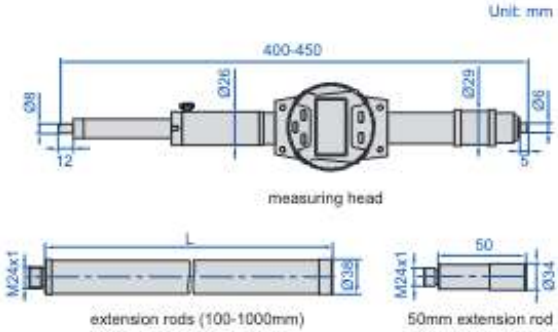



3522-1500

- Carbon fiber extension rods, light weight, not easy to deform, low thermal expansion
- Carbide measuring faces
- Data output
- Button function: on/off, zero, tolerance Go and No-Go display, data preset, measuring direction change, max./min./TIR measurement, inch/metric conversion, absolute/incremental measurement
- Supplied with 400mm setting standard
- Optional accessory: wireless transmitter code **7315-51** (receiver is needed) page 8

setting standard (included), used to set the measuring head



Measuring head

Range	Resolution	Accuracy	Repeatability	Weight
400-450mm	0.001mm/0.00005"	±6μm	±3μm	1kg

Extension rods

Length (L)	Accuracy	Weight	Material
50mm	±2μm	230g	steel
100mm	±3μm	300g	carbon fiber
200mm	±4.5μm	390g	carbon fiber
300mm	±6μm	470g	carbon fiber
600mm	±9μm	730g	carbon fiber
1000mm	±11μm	1000g	carbon fiber

spring loaded point, and max./min. value tracking make it easy to find the right measuring position



Code	Range	Weight	Extension rods
3522-1000	400-1000mm	3.8kg	50mm, 100mm, 200mm, 300mm
3522-1500	400-1500mm	4.5kg	50mm, 100mm, 200mm, 300mm, 600mm
3522-2000	400-2000mm	5.3kg	50mm, 100mm, 200mm, 300mm, 600mm (2 pcs)
3522-2400	400-2400mm	6.0kg	50mm, 100mm, 200mm, 300mm, 600mm (3 pcs)
3522-3400	400-3400mm	6.7kg	50mm, 100mm, 200mm, 300mm, 600mm (4 pcs)
3522-6400	400-6400mm	9.5kg	50mm, 100mm, 200mm, 300mm, 600mm, 1000mm (5 pcs)