DISK BRAKE MICROMETERS

RELATIVE PRODUCT: DIGITAL DISK BRAKE AND PAD CALIPER
DIGITAL DRUM BRAKE CALIPER (CODE 1162-, 1167-, 1168-)

- Measure thickness of disk brakes
- Graduation 0.01mm
- Ratchet stop
- Carbide measuring faces
- Supplied with setting standards





3288-33A

Code	Range	Accuracy	L
3288-33A	7.6-33mm	5μm	64.5mm
3288-50A	25-50mm	5μm	82mm

DIGITAL DISK BRAKE MICROMETERS

RELATIVE PRODUCT: DIGITAL DISK BRAKE AND PAD CALIPER
DIGITAL DRUM BRAKE CALIPER (CODE 1162-, 1167-, 1168-)

DATA OUTPUT

IP65 WATERPROOF

6

- Measure thickness of disk brakes
- Resolution 0.001mm/0.00005"
- IP65 dust/waterproof
- Button function: on/off, set, mm/inch, data transmit
- Data output
- Automatic power off
- Ratchet stop
- Carbide measuring faces
- Supplied with setting standards
- Power:
  with data interface: CR2032
  built-in wireless: rechargeable lithium battery



3588-33A

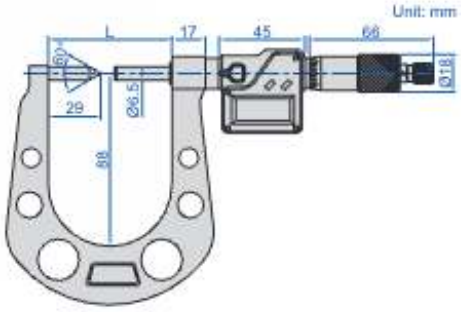

With data interface (optional wireless transmitter code 7315-31, receiver is needed page 8)

Code	Range	Accuracy	L
3588-33A	7.6-33mm/0.3-1.3"	±5μm	64.5mm
3588-50A	25-50mm/1-2"	±5μm	82mm

Built-in wireless (receiver code 7315-2/3/6/7/8/9 is needed)

Code	Range	Accuracy	L
3588-33AWL	7.6-33mm/0.3-1.3"	±5μm	64.5mm
3588-50AWL	25-50mm/1-2"	±5μm	82mm

SHEET METAL MICROMETERS

INSIZE PLUS

ATTENTION: SETTING STANDARDS ARE NOT INCLUDED

- Deep frame suitable for sheet metal, paper and plastic
- Graduation 0.01mm
- Ratchet stop
- Carbide measuring faces
- Optional accessory: setting standards (code **7386**)



3653-252A

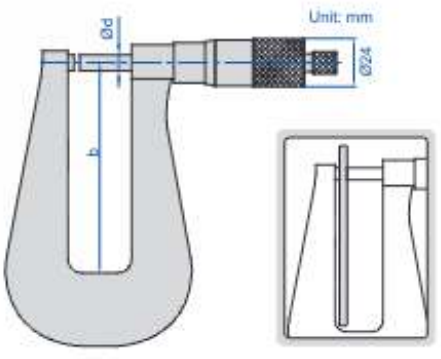

(mm)

Code	Range	Accuracy	b	Ød
3653-251A	0-25mm	4μm	50	6.5
3653-252A	0-25mm	5μm	100	8
3653-253A	0-25mm	6μm	150	6.5
3653-254A	0-25mm	8μm	250	6.5
3653-501A	25-50mm	4μm	50	8
3653-502A	0-50mm	4μm	50	8
3653-503A	0-50mm	5μm	100	8
3653-100A	50-100mm	5μm	100	8