INSPECTION CERTIFICATE

EXTERNAL SCREW THREAD MICROMETERS

INSIZE PLUS



3680-50

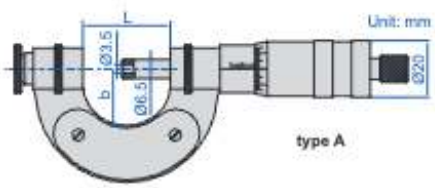



3680-4001

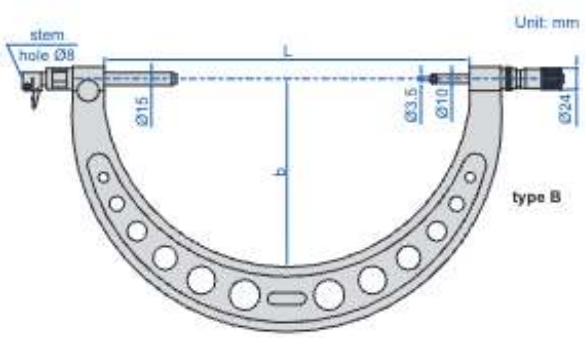

- Measure pitch diameter of screw threads
- Graduation 0.01mm
- Optional accessory: setting standards (code **7384**), external tread tips (code **7390**), dial/digital indicators (only for type B)

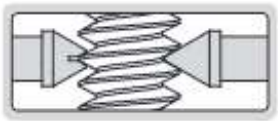

Type A (ratchet stop) (mm)

Code	Range	Accuracy	L	b
3680-25*	0-25mm	4μm	37	24
3680-50*	25-50mm	4μm	62	34
3680-75*	50-75mm	4μm	87	46
3680-100*	75-100mm	4μm	112	60
3680-125*	100-125mm	5μm	139	72
3680-150*	125-150mm	5μm	164	85
3680-200*	150-200mm	7μm	215	110
3680-250*	200-250mm	7μm	264	135
3680-300*	250-300mm	7μm	315	160

Type B (without ratchet stop) (mm)

Code	Range	Left anvil retracting sroke	Micrometer head accuracy	L	b
3680-3001*	200-300mm	2.5mm	6μm	320	165
3680-4001*	300-400mm	2.5mm	7μm	430	220
3680-5001*	400-500mm	2.5mm	8μm	530	273
3680-6001*	500-600mm	2.5mm	9μm	630	323
3680-7001*	600-700mm	2.5mm	9μm	730	378
3680-8001*	700-800mm	2.5mm	9μm	830	423
3680-9001*	800-900mm	2.5mm	10μm	930	473
3680-10001*	900-1000mm	2.5mm	10μm	1030	520
3680-4002*	200-400mm	2.5mm	7μm	430	220
3680-6002*	400-600mm	2.5mm	9μm	630	323
3680-8002*	600-800mm	2.5mm	9μm	830	423
3680-10002*	800-1000mm	2.5mm	10μm	1030	520
3680-12002*	1000-1200mm	2.5mm	11μm	1230	635
3680-14002*	1200-1400mm	2.5mm	12μm	1430	735
3680-16002*	1400-1600mm	2.5mm	18μm	1660	840
3680-18002*	1600-1800mm	2.5mm	20μm	1870	940
3680-20002*	1800-2000mm	2.5mm	22μm	2075	1055

*Supplied with manufacturer inspection certificate