MICROMETERS WITH DIAL INDICATOR

INSIZE PLUS

ATTENTION: SETTING STANDARDS ARE NOT INCLUDED

LIGHT WEIGHT

digital indicator is optional



3685-300

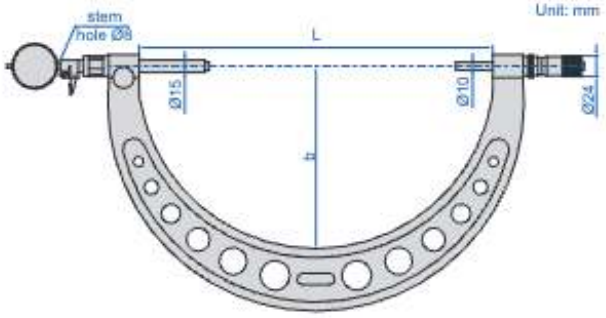

- Graduation 0.01mm
- Anvil with vernier graduation, convenient adjustment for different measuring ranges
- Meet DIN863-3
- Carbide measuring faces
- Anvil retracting range: 2.5mm
- Optional accessory: dial/digital indicators, setting standards (code **7386**)

anvil with vernier graduation, can be adjusted for different measuring ranges



Range 100mm (mm)

Code	Range	Micrometer head accuracy	L	b	Weight
3685-300	200-300mm	6μm	320	165	1.7kg
3685-400	300-400mm	7μm	430	220	2.1kg
3685-500	400-500mm	8μm	530	273	2.6kg
3685-600	500-600mm	9μm	630	323	3.3kg
3685-700	600-700mm	9μm	730	378	4.0kg
3685-800	700-800mm	9μm	830	423	4.4kg
3685-900	800-900mm	10μm	930	473	5.2kg
3685-1000	900-1000mm	10μm	1030	520	6.4kg

Range 200mm (mm)

Code	Range	Micrometer head accuracy	L	b	Weight
3685-402	200-400mm	7μm	430	220	2.2kg
3685-602	400-600mm	9μm	630	323	3.4kg
3685-802	600-800mm	9μm	830	423	4.5kg
3685-1002	800-1000mm	10μm	1030	520	6.5kg
3685-1202	1000-1200mm	11μm	1230	635	8.9kg
3685-1402	1200-1400mm	12μm	1430	735	11.6kg
3685-1602	1400-1600mm	18μm	1660	840	13.9kg
3685-1802	1600-1800mm	20μm	1870	940	16.5kg
3685-2002	1800-2000mm	22μm	2075	1055	19.1kg

MICROMETERS WITH DIAL INDICATOR

ATTENTION: NOT SUITABLE FOR 0.001MM DIAL INDICATORS

- Meet DIN863-3
- Micrometer head graduation 0.01mm
- Anvil retracting range: 8mm
- Carbide measuring faces
- Supplied with setting standards (except 0-25mm)
- Optional accessory: dial indicators (graduation 0.01mm), digital indicators (resolution 0.01mm/0.0005")



digital indicator is optional

3331-25A

Code	Micrometer head range	Micrometer head accuracy	L	b
3331-25A	0-25mm	4μm	67mm	38mm
3331-50A	25-50mm	4μm	92.4mm	50mm
3331-75A	50-75mm	5μm	117.6mm	62mm
3331-100A	75-100mm	5μm	143mm	70mm
3331-125A	100-125mm	6μm	168.2mm	82mm
3331-150A	125-150mm	6μm	192mm	94.5mm
3331-175A	150-175mm	7μm	217mm	107mm

