ATTENTION: SETTING STANDARDS ARE NOT INCLUDED

INSPECTION CERTIFICATE

OUTSIDE MICROMETERS

INSIZE PLUS

- Carbide measuring faces
- Graduation: 0.01mm
- Meet DIN863-1
- Friction thimble
- Optional accessory: setting standards (code **7386**)

Code	Range	Accuracy	L	b
3701-25A*	0-25mm	4μm	37mm	24mm
3701-50A*	25-50mm	4μm	62mm	34mm
3701-75A*	50-75mm	5μm	87mm	46mm
3701-100A*	75-100mm	5μm	112mm	60mm
3701-125A*	100-125mm	6μm	139mm	72mm
3701-150A*	125-150mm	6μm	164mm	85mm
3701-175A*	150-175mm	7μm	190mm	97mm
3701-200A*	175-200mm	7μm	215mm	110mm
3701-225A*	200-225mm	8μm	240mm	122mm
3701-250A*	225-250mm	8μm	264mm	135mm
3701-275A*	250-275mm	9μm	290mm	148mm
3701-300A*	275-300mm	9μm	315mm	160mm

*Supplied with manufacturer inspection certificate



3701-25A

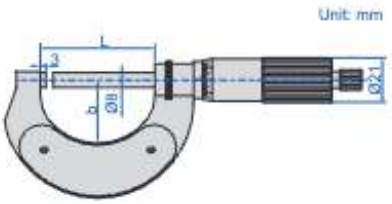

6

ATTENTION: SETTING STANDARDS ARE NOT INCLUDED

LIGHT WEIGHT

OUTSIDE MICROMETERS WITH 50mm RANGE

INSIZE PLUS

- Graduation 0.01mm
- Ratchet stop
- One turn of sleeve makes 1mm spindle feed
- Carbide measuring faces
- Optional accessory: setting standards (code **7386**)

(mm)

Code	Range	Type	Accuracy	L	b	Weight
3682-50	0-50mm	A	4μm	62	34	0.46kg
3682-100	50-100mm	A	5μm	112	60	0.62kg
3682-150	100-150mm	A	6μm	164	85	0.78kg
3682-200	150-200mm	A	7μm	215	110	1.03kg
3682-250	200-250mm	A	8μm	264	135	1.25kg
3682-300	250-300mm	A	9μm	315	160	1.45kg
3682-350	300-350mm	B	10μm	370	190	1.50kg
3682-400	350-400mm	B	11μm	430	220	1.80kg
3682-450	400-450mm	B	12μm	475	250	2.15kg
3682-500	450-500mm	B	13μm	530	273	2.30kg
3682-550	500-550mm	B	14μm	570	291	2.40kg
3682-600	550-600mm	B	14μm	630	323	3.00kg
3682-650	600-650mm	B	16μm	675	351	3.30kg
3682-700	650-700mm	B	16μm	730	378	3.70kg
3682-750	700-750mm	B	18μm	785	401	3.90kg
3682-800	750-800mm	B	18μm	830	423	4.10kg
3682-850	800-850mm	B	20μm	885	440	4.30kg
3682-900	850-900mm	B	20μm	930	473	4.90kg
3682-950	900-950mm	B	22μm	980	503	5.80kg
3682-1000	950-1000mm	B	22μm	1030	520	6.10kg



3682-50

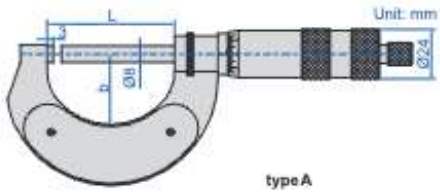

type A

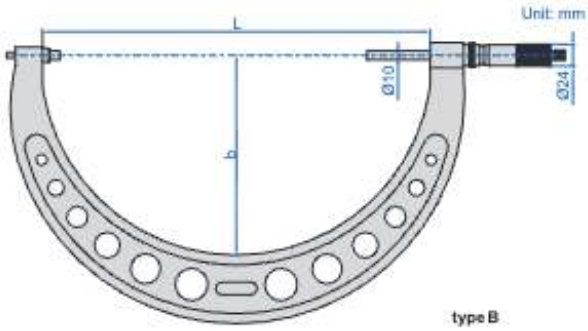

type B