SQUARE SET

- Includes:
  - 90° tool maker square 25x20mm DIN875 grade 00 (code **4794-025**)
  - 90° tool maker square 40x28mm DIN875 grade 00 (code **4794-040**)
  - 90° beveled edge square 75x50mm DIN875 grade 00 (code **4790-075**)
  - straight edge 100mm DIN874 (code **4700-100**)
  - scriber
- Made of hardened stainless steel



4702-1

Unit: mm

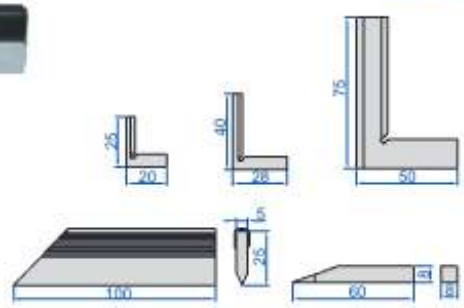

Code
4702-1

GRANITE STRAIGHT EDGES

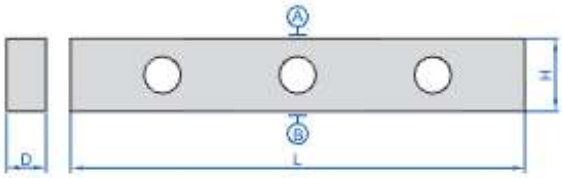



4147-500A

Code	Length (L)	Flatness of A and B	Parallelism between A and B	D	H
4147-500A	500mm	2.1μm	3.2μm	50mm	80mm
4147-1000A	1000mm	3.0μm	4.5μm	60mm	120mm

LIGHT WEIGHT

MAGNALIUM STRAIGHT EDGES

- Made of magnalium, light weight, non-deform, no rusty



4180-1500

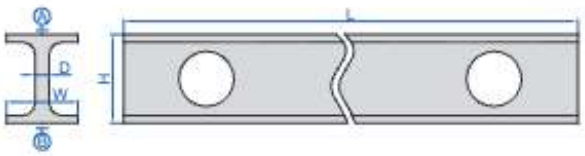

Code	Length (L)	Flatness of A and B	Parallelism between A and B	H	W	D	Weight
4180-500	500mm	3μm	4μm	60mm	30mm	5mm	1kg
4180-1000	1000mm	5μm	8μm	60mm	30mm	5mm	1.5kg
4180-1500	1500mm	15μm	22μm	100mm	40mm	7mm	4.5kg
4180-2000	2000mm	18μm	27μm	100mm	40mm	7mm	6kg
4180-2500	2500mm	22μm	33μm	100mm	40mm	7mm	7.5kg
4180-3000	3000mm	48μm	72μm	150mm	80mm	8mm	21kg