FEELER GAUGE



4601-25

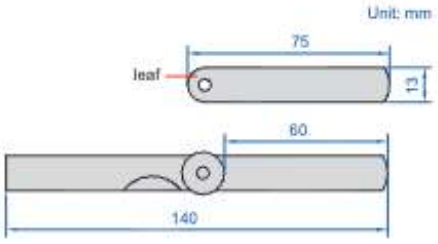

- Made of hardened alloy steel
- Meet DIN2275/grade TC1
- Accuracy: ±(3+T/80)μm,
  'T' is the thickness of leaves in μm

Code	Range	Thickness of leaves included (mm)	Quantity of leaves
4601-25	0.04-1.00mm	0.04, 0.05, 0.06, 0.07, 0.08, 0.09, 0.10, 0.15, 0.20, 0.25, 0.30, 0.35, 0.40, 0.45, 0.50, 0.55, 0.60, 0.65, 0.70, 0.75, 0.80, 0.85, 0.90, 0.95, 1.00	25

FEELER GAUGES



4602-20

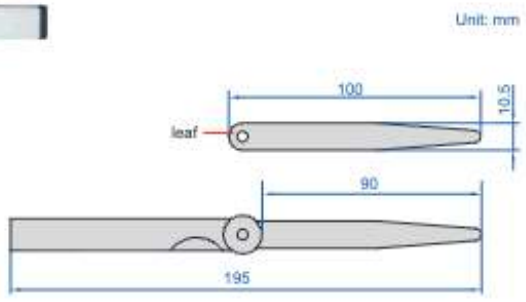

- Made of hardened alloy steel
- Meet DIN2275/grade TC1
- Accuracy: ±(3+T/80)μm,
  'T' is the thickness of leaves in μm

Code	Range	Thickness of leaves included (mm)	Quantity of leaves
4602-13A	0.03-0.50mm	0.03, 0.04, 0.05, 0.06, 0.07, 0.08, 0.09, 0.10, 0.15, 0.20, 0.30, 0.40, 0.50	13
4602-13	0.05-1.00mm	0.05, 0.10, 0.15, 0.20, 0.25, 0.30, 0.40, 0.50, 0.60, 0.70, 0.80, 0.90, 1.00	13
4602-17	0.02-1.00mm	0.02, 0.03, 0.04, 0.05, 0.06, 0.07, 0.08, 0.09, 0.10, 0.15, 0.20, 0.25, 0.30, 0.40, 0.50, 0.75, 1.00	17
4602-20	0.05-1.00mm	0.05, 0.10, 0.15, 0.20, 0.25, 0.30, 0.35, 0.40, 0.45, 0.50, 0.55, 0.60, 0.65, 0.70, 0.75, 0.80, 0.85, 0.90, 0.95, 1.00	20
4602-28	0.05-1.00mm	0.05, 0.06, 0.07, 0.08, 0.09, 0.10, 0.11, 0.12, 0.13, 0.14, 0.15, 0.20, 0.25, 0.30, 0.35, 0.40, 0.45, 0.50, 0.55, 0.60, 0.65, 0.70, 0.75, 0.80, 0.85, 0.90, 0.95, 1.00	28
4602-32	0.03-1.00mm	0.03, 0.04, 0.05, 0.06, 0.07, 0.08, 0.09, 0.10, 0.13, 0.15, 0.18, 0.20, 0.23, 0.25, 0.28, 0.30, 0.33, 0.35, 0.38, 0.40, 0.45, 0.50, 0.55, 0.60, 0.63, 0.65, 0.70, 0.75, 0.80, 0.85, 0.90, 1.00	32
4602-15	0.05-2.00mm	0.05, 0.10, 0.15, 0.20, 0.25, 0.30, 0.40, 0.50, 0.60, 0.70, 0.80, 0.90, 1.00, 1.50, 2.00	15