VERTICAL BENCH CENTER



4728-360

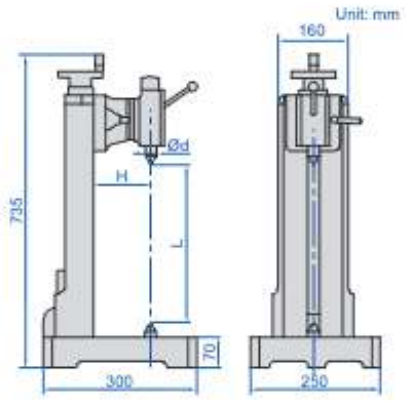

- Distance between two centers (L): 360mm
- Hardened cast-iron guide surface
- Use handwheel to move the tailstock
- Optional accessory:
  magnetic stands, dial test indicator

Code	Parallelism*	Runout accuracy	Center height (H)	Diameter of center (Ød)	Taper of center	Weight	Load
4728-360	0.01mm	2μm	130mm	24.1mm	MT3	85kg	80kg

*Parallelism of two centers to the guide surface

VERTICAL AND HORIZONTAL BENCH CENTER



vertical use



horizontal use



side use

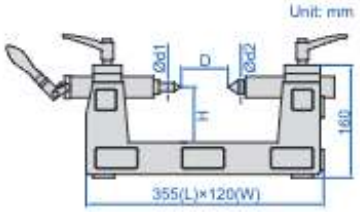

- For vertical, side and horizontal use

Code	Runout accuracy	Center height (H)	Distance between two centers (D)	Diameter of center (Ød1/Ød2)	Weight	Load
4722-200	2μm	80mm	200mm	16mm/20.2mm	22kg	25kg