## BENCH CENTER WITH ROLLER TAILSTOCKS

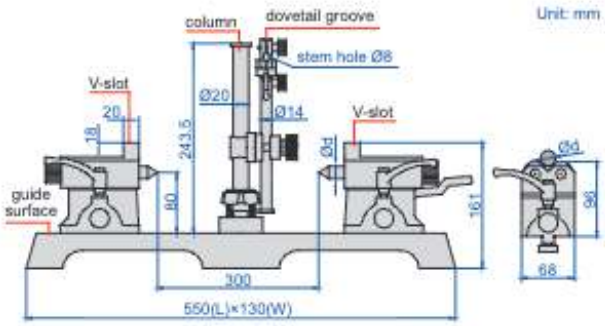








4720-300

- Hardened cast-iron guide surface
- Supplied with V-slot/center tailstocks and roller tailstocks
- V-slot for cylinder Ø4~22mm
- Roller for cylinder Ø5~100mm

| Code | Parallelism* | Runout accuracy | Center height | Distance between two centers | Diameter of center (Ød) | Taper of center | Load |
|---|---|---|---|---|---|---|---|
| 4720-300 | 0.01mm | 2μm | 80mm | 300mm | 16mm | MT1 | 25kg (40kg for roller tailstocks) |

*Parallelism of two centers to the guide surface

## MOTORIZED BENCH CENTER

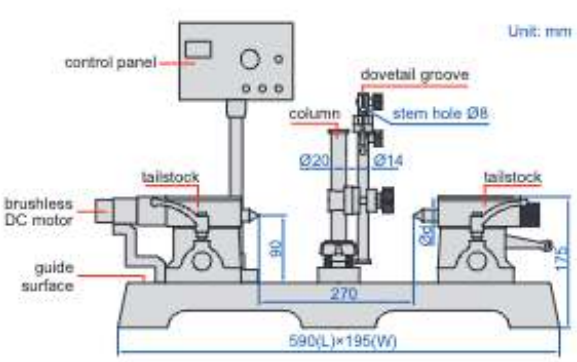





4735-270

- Moveable column
- Hardened cast-iron guide surface
- Motorized measurement is suitable for mass production inspection
- Power supply: AC220V/10A/(50/60)Hz
- Optional accessory: dial test indicators

| Code | Parallelism* | Runout accuracy | Center height | Distance between two centers | Diameter of center (Ød) | Taper of center | Weight | Load |
|---|---|---|---|---|---|---|---|---|
| 4735-270 | 0.010mm | 2μm | 90mm | 270mm | 18mm | MT2 | 40kg | 25kg |

*Parallelism of two centers to the guide surface