DIGITAL WELDING GAUGE

ATTENTION:
NO DATA OUTPUT



4831-20A

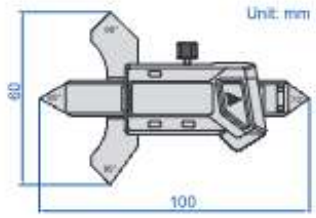

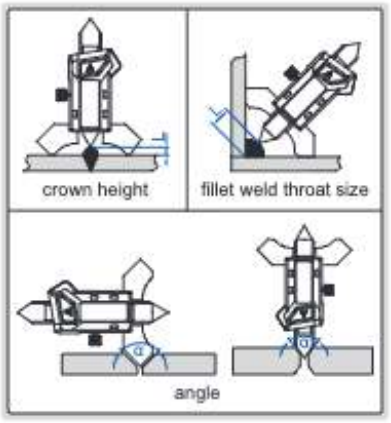

- Non waterproof
- Buttons: zero, mm/inch, on/off
- Battery LR44
- Made of stainless steel

Code	Measurement	Range	Resolution	Accuracy
4831-20A	crown height	0-7mm	0.01mm/0.0005"	±0.03mm
	fillet weld throat size	0-20mm	0.01mm/0.0005"	±0.1mm
	angle	60°, 70°, 80°, 90°	—	±1°

WELDING GAUGE



4850-1

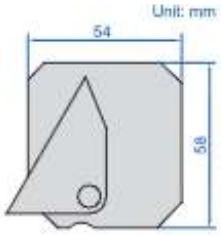

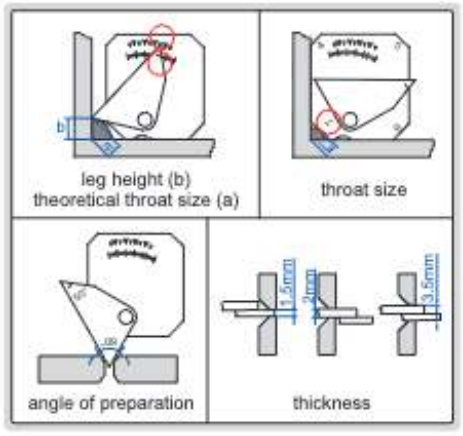

- Made of stainless steel

Code	Measurement	Range	Graduation	Accuracy
4850-1	leg height (b)	0-18mm	1mm	±0.5mm
	theoretical throat size (a)	2-12mm	1mm	±0.5mm
	throat size	4, 5, 6, 7mm	—	±0.5mm
	angle of preparation	50°, 60°	—	±1°
	thickness	1.5, 2, 3.5mm	—	±0.2mm

WELDING GAUGE



4851-1

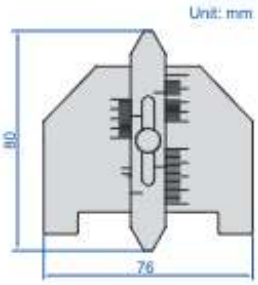

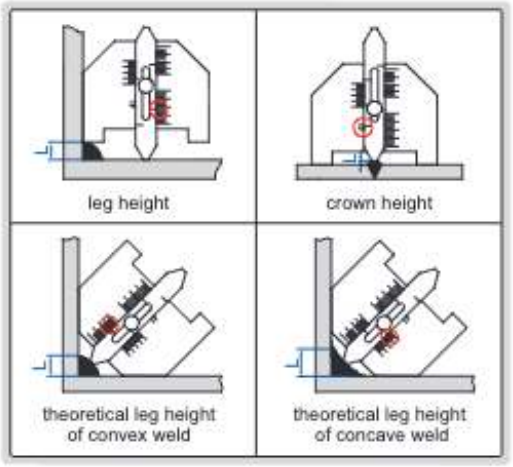

- Made of stainless steel

Code	Measurement	Range	Graduation	Accuracy
4851-1	leg height	0-20mm	1mm	±0.5mm
	crown height	0-3mm	—	±0.5mm
	theoretical leg height of convex weld	0-20mm	1mm	±0.5mm
	theoretical leg height of concave weld	0-20mm	1mm	±0.5mm