WELDING GAUGE

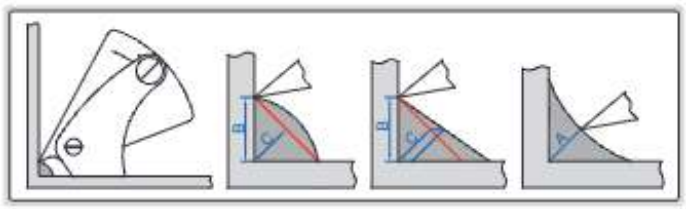

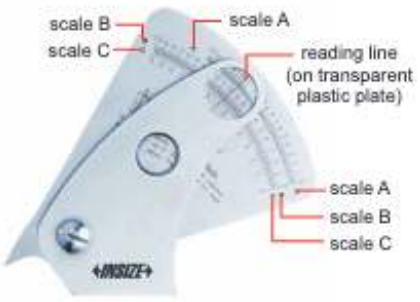

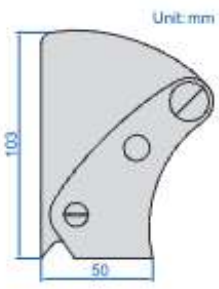

Code	Graduation	Accuracy
4840-1	0.2mm	±0.3mm

- Made of stainless steel

4840-1

WELDING GAUGE

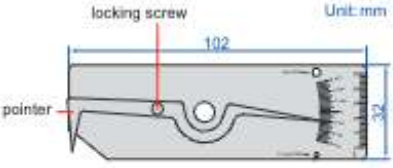



4834-1

- Pointer can be locked for later reference
- Made of stainless steel

Code	Measurement	Range	Graduation	Accuracy
4834-1	undercut depth	0-6mm	0.5mm	±0.5mm
	crown height	0-6mm	0.5mm	±0.5mm
	porosity size comparison	1.5mm, 3mm	—	±0.2mm
	amount of porosity per 25mm	25mm	1mm	—

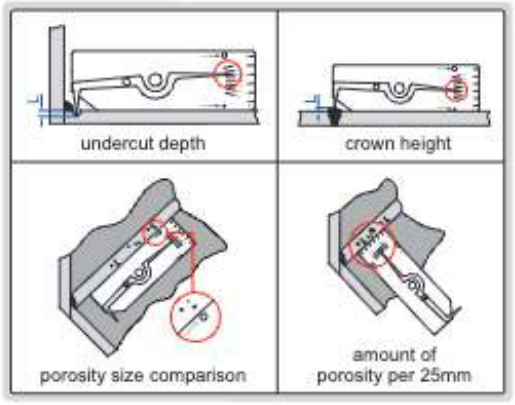

WELDING GAUGE

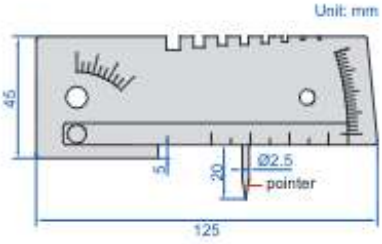



4848-1

- Made of stainless steel

Code	Measurement	Range	Graduation	Accuracy
4848-1	misalignment (high-low)	-5mm~+15mm	1mm	±0.5mm
	angle of preparation	0°-45°	5°	±2.5°
	length	0-50mm	1mm	±0.5mm
	gap	1-4mm	0.5mm	±0.25mm
	thickness	1, 1.2, 2.0, 2.5, 3.0, 3.25, 4.0, 5.0mm	—	±0.1mm

