FRAME LEVELS

INSIZE PLUS

NO NEED TO SET ZERO BEFORE USE



4906-150

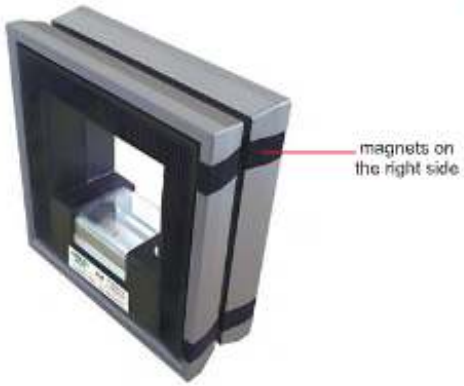

4906-150M

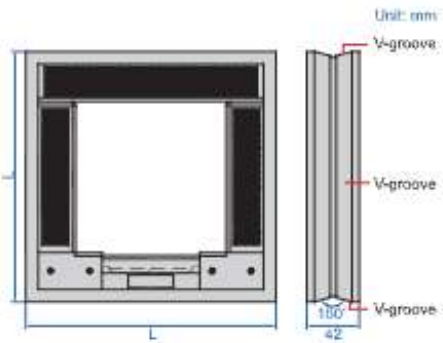

- No need to set zero before use
- Three V-grooves for shafts (shafts dia. 19.3~115.9mm)
- With longitudinal vial

Code		Size (L×L)	Remark
Sensitivity 0.02mm/m (=0.001°)	Sensitivity 0.1mm/m (=0.0057°)		
4906-150	4906-B150	150×150mm	–
4906-200	4906-B200	200×200mm	–
4906-300	4906-B300	300×300mm	–
4906-150M	4906-B150M	150×150mm	with magnet
4906-200M	4906-B200M	200×200mm	with magnet
4906-300M	4906-B300M	300×300mm	with magnet